SOCIETÁ PER L'ELETTRONICA s.r.l.

EXPERT 1K-FA

1KW SOLID STATE FULLY AUTOMATIC LINEAR AMPLIFIER

SCHEMATIC DIAGRAMS

SECOND SERIES
CERTIFIED CE/FCC

MAIN INDEX

SOCIETÁ PER L'ELETTRONICA s.r.l.

LINEAR AMPLIFIER

SCB-AZ000010 MB

BLOCK DIAGRAM

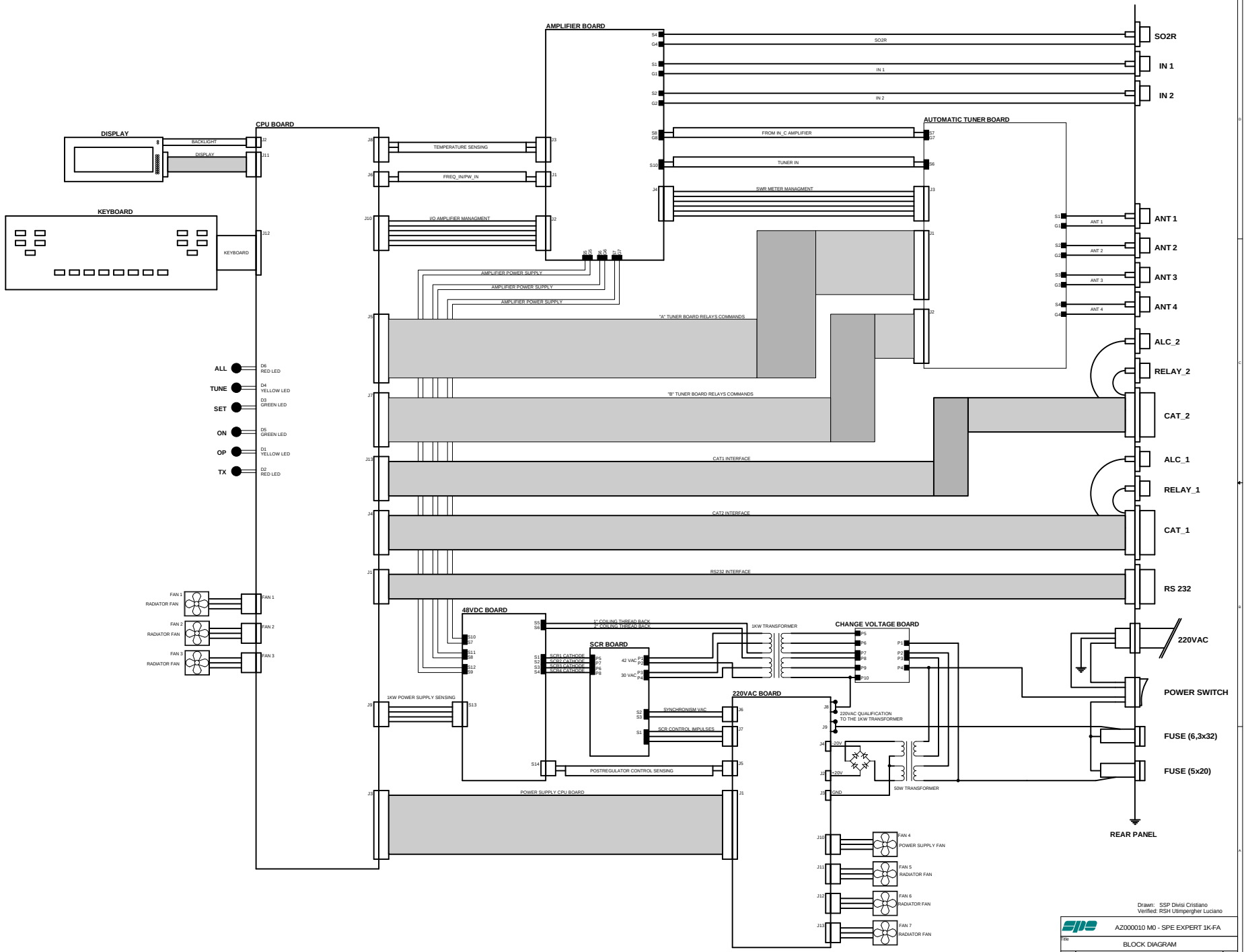

Drawn: SSP Divisi Cristiano
Verified: RSH Ultmpergher Luciano

AZ000010 M0 - SPE EXPERT 1K-FA

Title: BLOCK DIAGRAM

Size | Document Number: SCE-PE000060 M2 | Rev: B

Date: Thursday, September 06, 2007 | Sheet 1 of 1

SOCIETÁ PER L'ELETTRONICA s.r.l.

CPU BOARD

SCE-PE000066 MD

CIRCUIT DIAGRAM

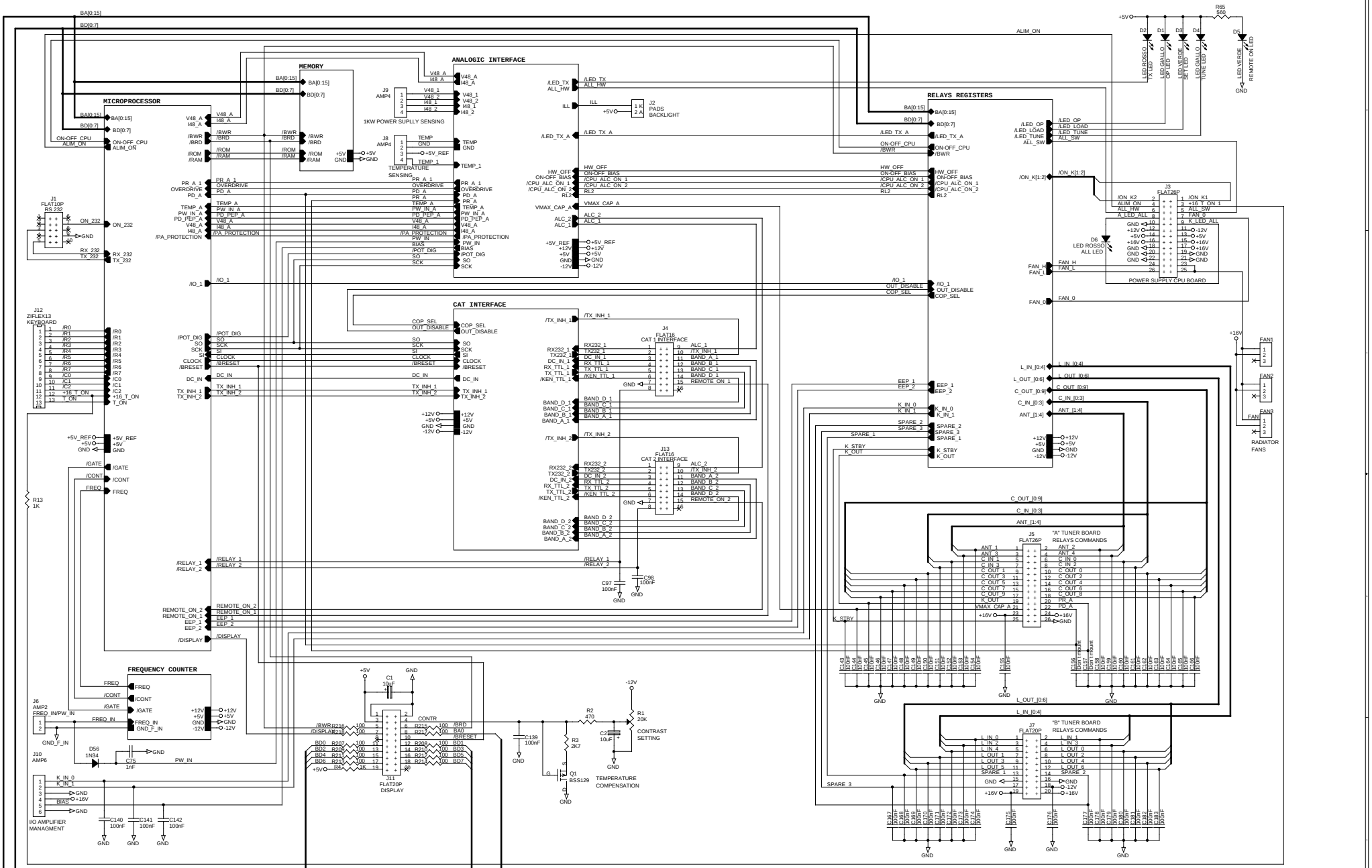
MICROPROCESSOR
MEMORY
ANALOGIC INTERFACE
CAT INTERFACE
RELAYS REGISTERS
FREQUENCY COUNTER
J1 FLAT10P RS 232
J12 ZIFLEX13 KEYBOARD
J9 AMP4
1KW POWER SUPLLY SENSING
J8 AMP4
TEMPERATURE SENSING
J2 PADS BACKLIGHT
J4 FLAT16 CAT 1 INTERFACE
J13 FLAT16 CAT 2 INTERFACE
J3 FLAT26P
POWER SUPPLY CPU BOARD
J5 FLAT26P
"A" TUNER BOARD RELAYS COMMANDS
J7 FLAT20P
"B" TUNER BOARD RELAYS COMMANDS
RADIATOR FANS
J6 AMP2 FREQ_IN/PW_IN
J10 AMP6
I/O AMPLIFIER MANAGMENT
J11 FLAT20P DISPLAY
CONTRAST SETTING
TEMPERATURE COMPENSATION
FILTER CAPACITORS
Drawn: SSP Divisi Cristiano
Verified: RSH Utimpergher Luciano
AZ000010 M0 - SPE EXPERT 1K-FA
CPU BOARD
BLOCK DIAGRAM
Size A2
Document Number SCE-PE000066 M3
Rev D
Date: Tuesday, September 04, 2007
Sheet 1 of 9

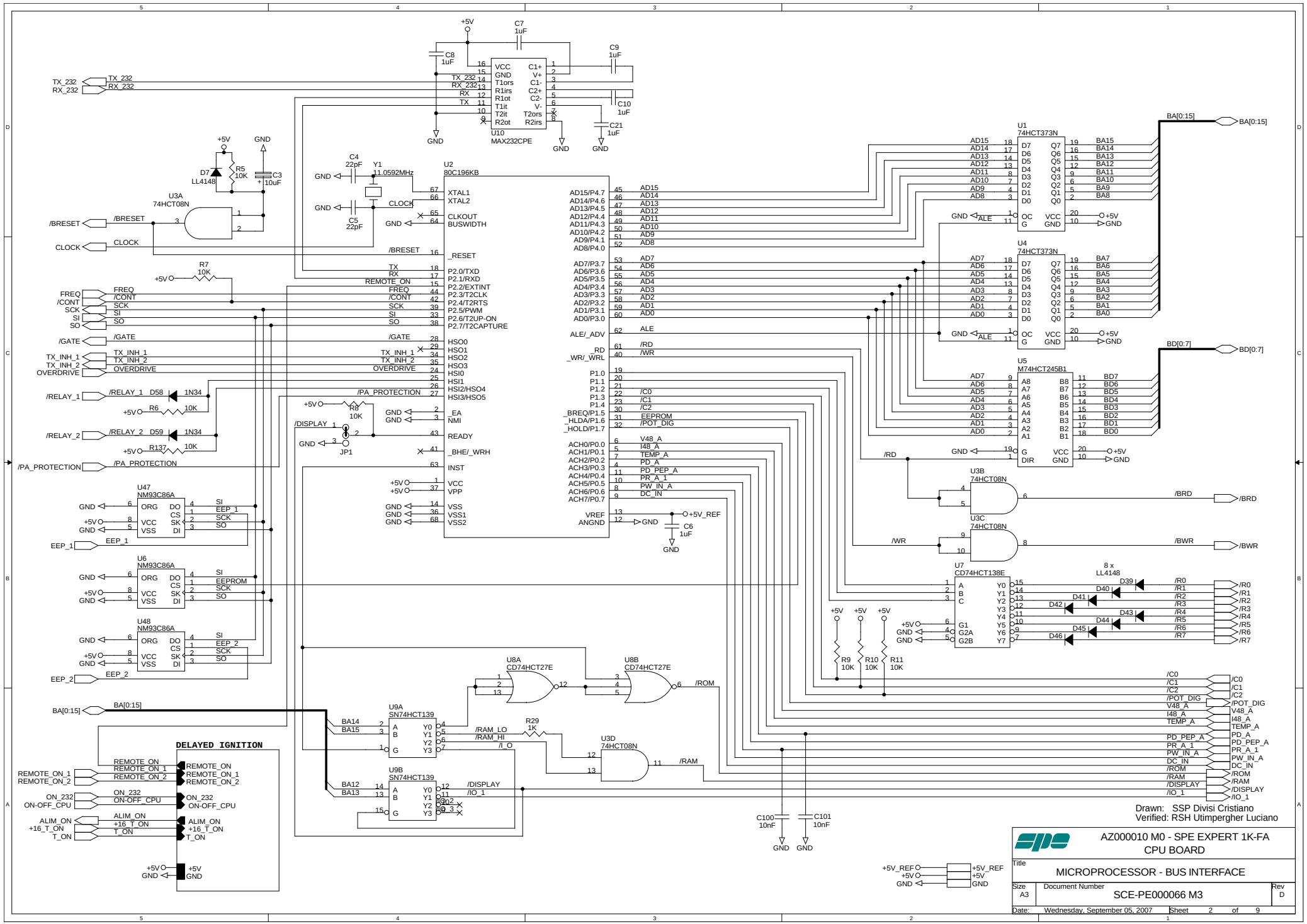
U10
MAX232CPE
U2
80C196KB
U1
74HCT373N
U4
74HCT373N
U5
M74HCT245B1
U3A
74HCT08N
U3B
74HCT08N
U3C
74HCT08N
U3D
74HCT08N
U7
CD74HCT138E
U8A
CD74HCT27E
U8B
CD74HCT27E
U9A
SN74HCT139
U9B
SN74HCT139
U47
NM93C86A
U6
NM93C86A
U48
NM93C86A
DELAYED IGNITION
Drawn: SSP Divisi Cristiano
Verified: RSH Utimpergher Luciano
AZ000010 M0 - SPE EXPERT 1K-FA
CPU BOARD
MICROPROCESSOR - BUS INTERFACE
SCE-PE000066 M3
Size A3
Rev D
Date: Wednesday, September 05, 2007
Sheet 2 of 9

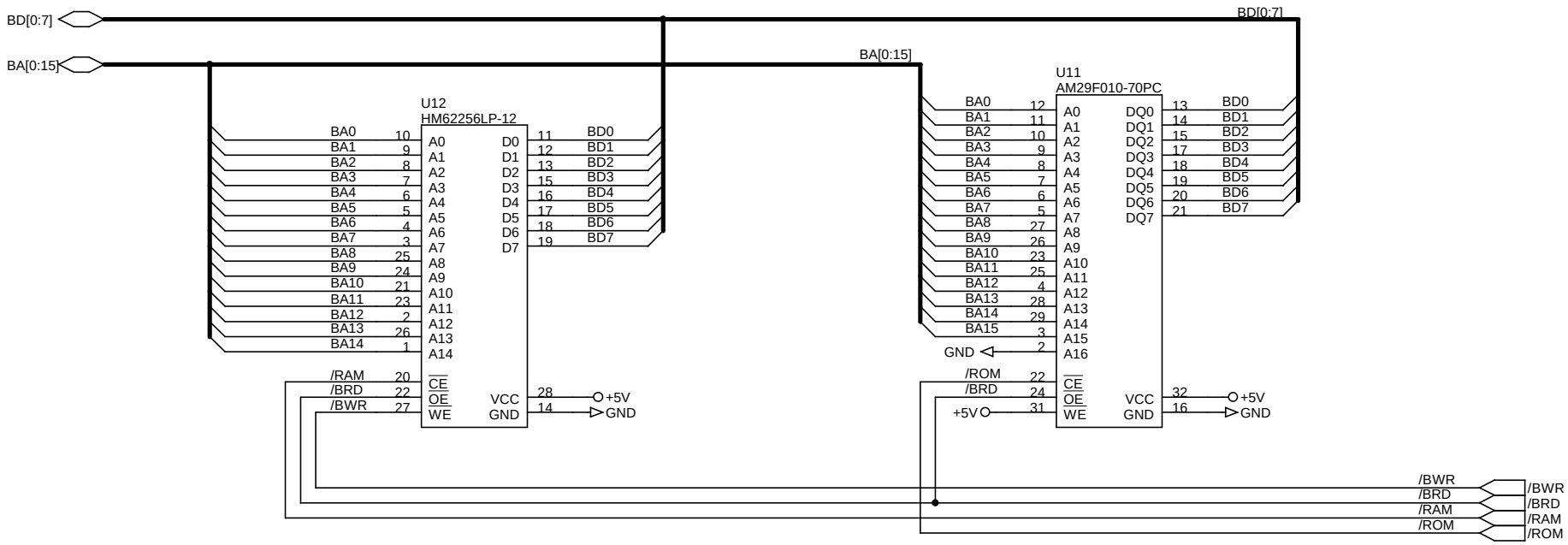

Drawn: SSP Divisi Cristiano
Verified: RSH Utimpergher Luciano

AZ000010 M0 - SPE EXPERT 1K-FA
CPU BOARD

Title: MEMORY

Size: A4 | Document Number: SCE-PE000066 M3 | Rev: D

Date: Tuesday, September 04, 2007 | Sheet 3 of 9

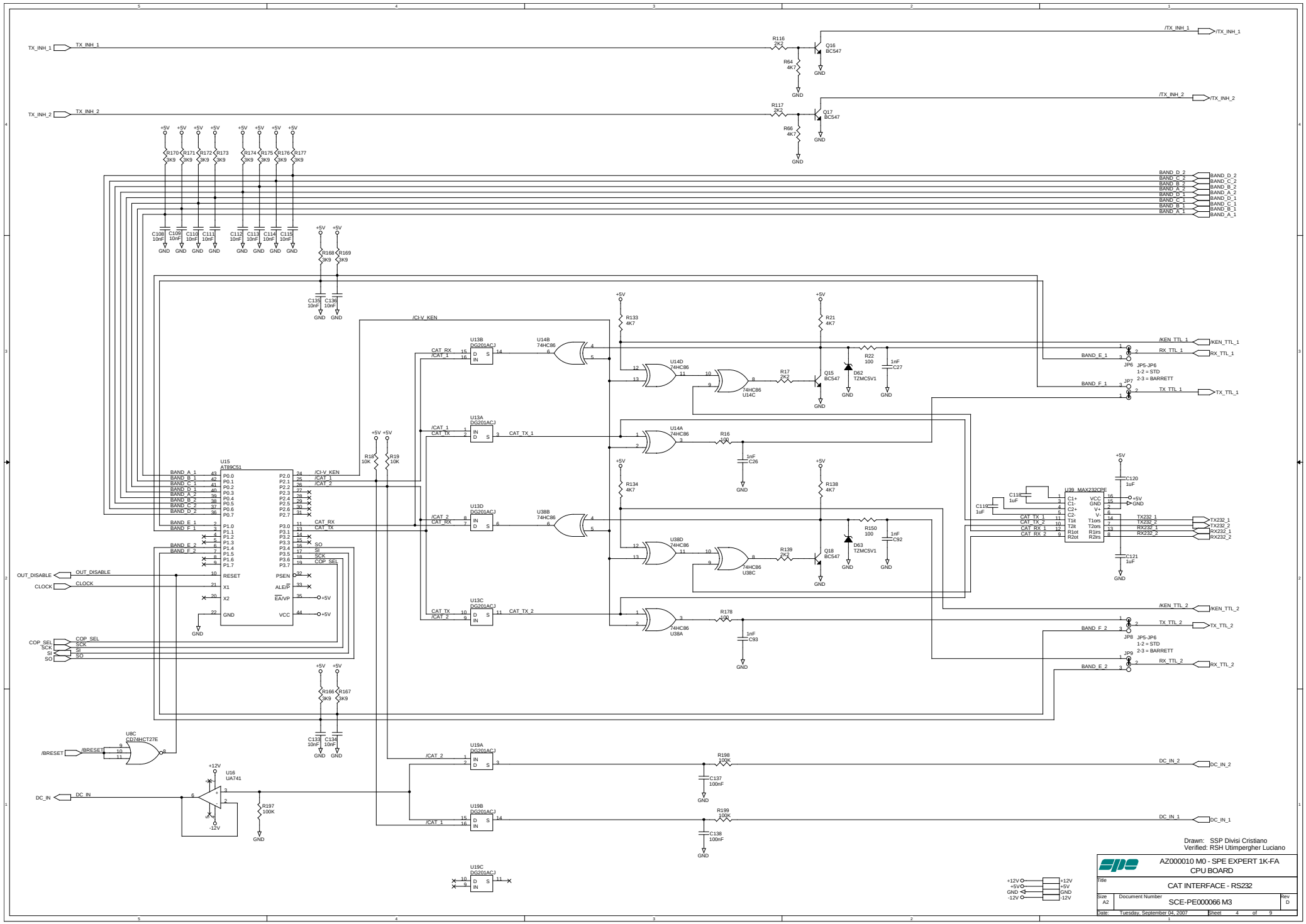

Drawn: SSP Divisi Cristiano
Verified: RSH Utimpergher Luciano

	AZ000010 M0 - SPE EXPERT 1K-FA CPU BOARD
Title	CAT INTERFACE - RS232
Size A2	Document Number SCE-PE000066 M3 Rev D
Date: Tuesday, September 04, 2007	Sheet 4 of 9

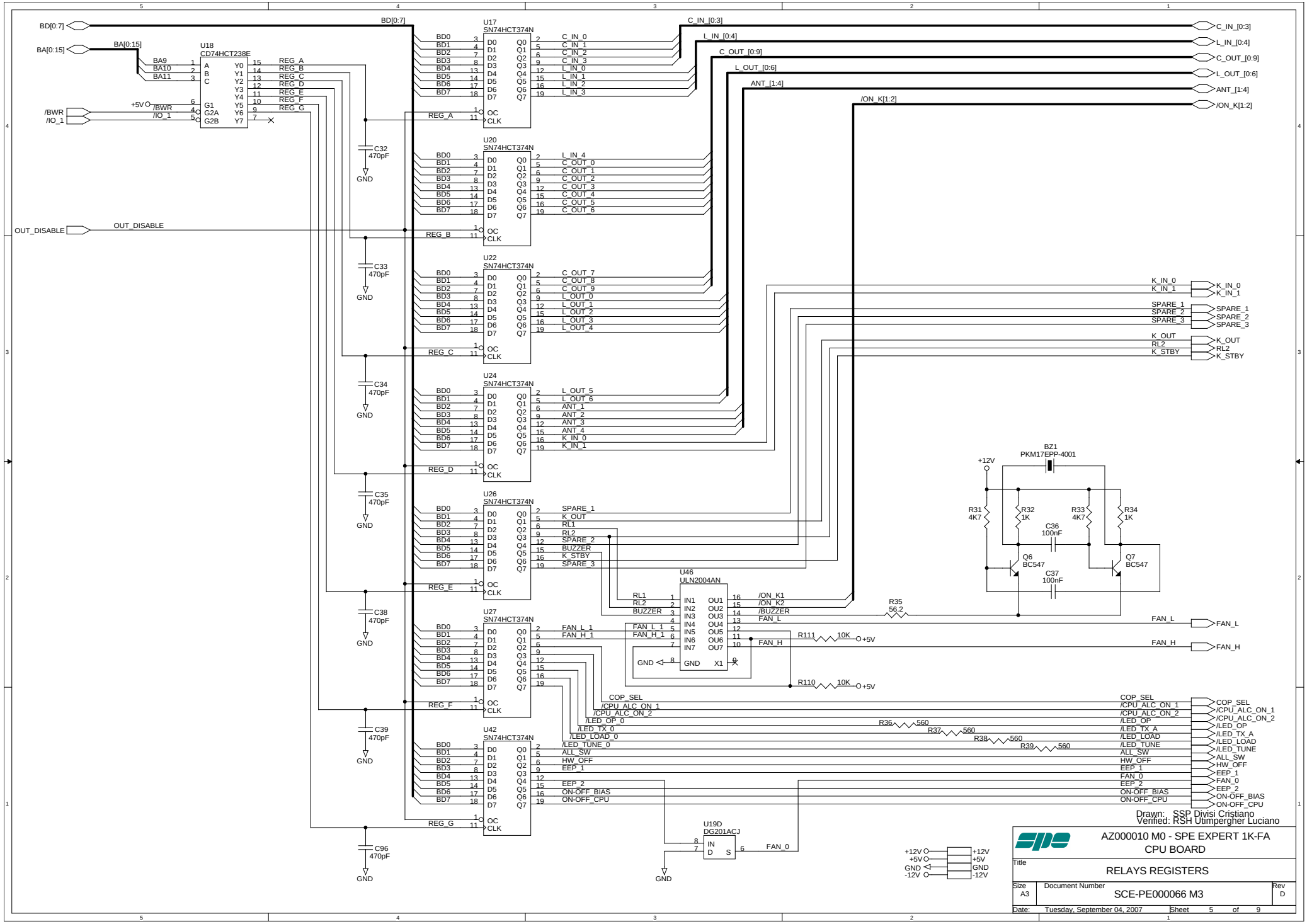
BD[0:7]
BA[0:15]
U18
CD74HCT238E
/BWR
/IO_1
+5V
OUT_DISABLE
U17
SN74HCT374N
U20
SN74HCT374N
U22
SN74HCT374N
U24
SN74HCT374N
U26
SN74HCT374N
U27
SN74HCT374N
U42
SN74HCT374N
U46
ULN2004AN
U19D
DG201ACJ
C32 470pF
C33 470pF
C34 470pF
C35 470pF
C38 470pF
C39 470pF
C96 470pF
GND
C_IN_[0:3]
L_IN_[0:4]
C_OUT_[0:9]
L_OUT_[0:6]
ANT_[1:4]
/ON_K[1:2]
K_IN_0
K_IN_1
SPARE_1
SPARE_2
SPARE_3
K_OUT
RL2
K_STBY
BZ1
PKM17EPP-4001
+12V
R31 4K7
R32 1K
R33 4K7
R34 1K
C36 100nF
C37 100nF
Q6 BC547
Q7 BC547
R35 56.2
R111 10K
R110 10K
FAN_L
FAN_H
COP_SEL
/CPU_ALC_ON_1
/CPU_ALC_ON_2
/LED_OP
/LED_TX_A
/LED_LOAD
/LED_TUNE
ALL_SW
HW_OFF
EEP_1
FAN_0
EEP_2
ON-OFF_BIAS
ON-OFF_CPU
R36 560
R37 560
R38 560
R39 560
-12V
Drawn: SSP Divisi Cristiano
Verified: RSH Utimpergher Luciano
AZ000010 M0 - SPE EXPERT 1K-FA
CPU BOARD
Title
RELAYS REGISTERS
Size A3
Document Number
SCE-PE000066 M3
Rev D
Date: Tuesday, September 04, 2007
Sheet 5 of 9

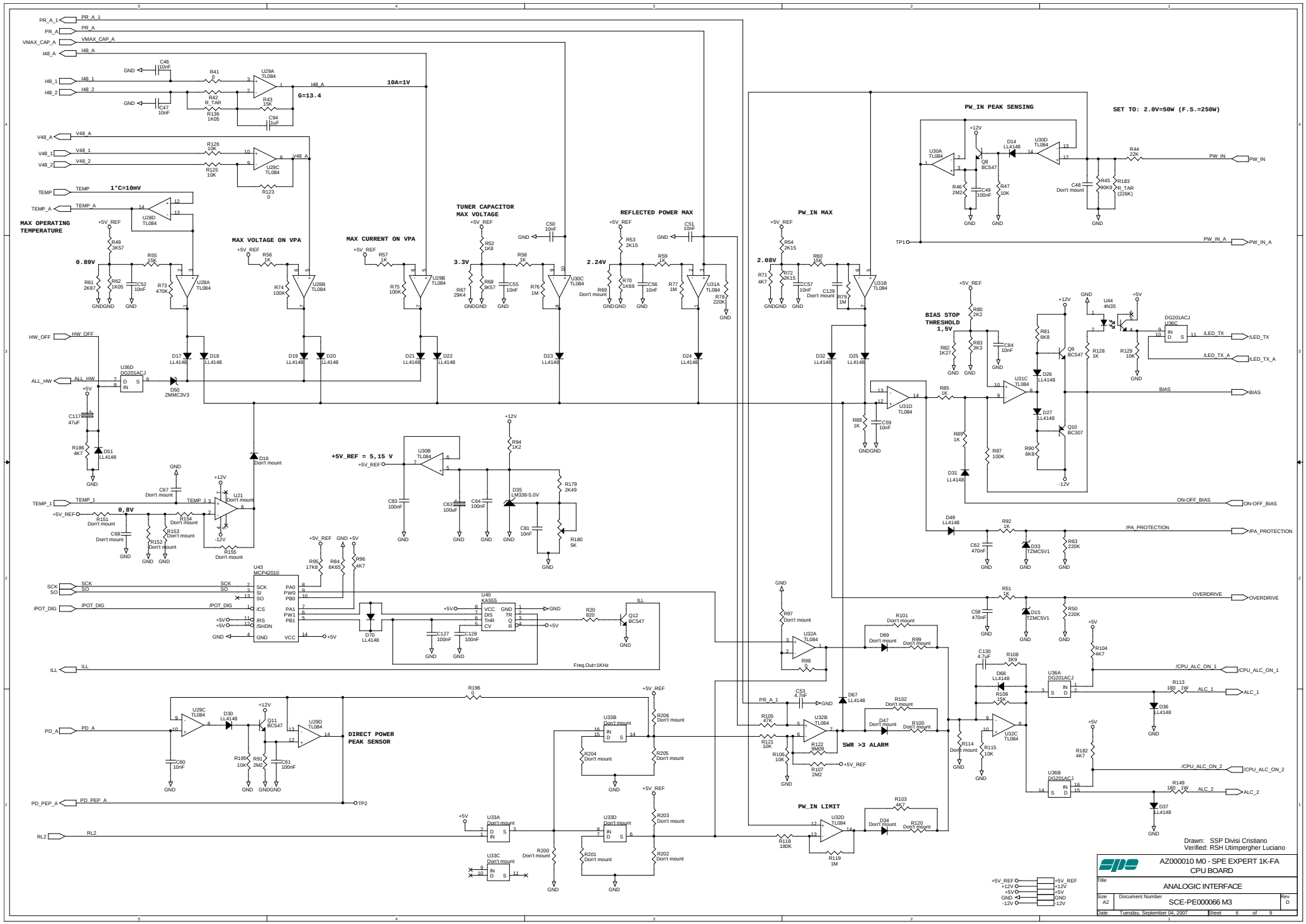
MAX OPERATING TEMPERATURE
MAX VOLTAGE ON VPA
MAX CURRENT ON VPA
TUNER CAPACITOR MAX VOLTAGE
REFLECTED POWER MAX
PW_IN MAX
PW_IN PEAK SENSING
SET TO: 2.0V=50W (F.S.=250W)
BIAS STOP THRESHOLD 1,5V
+5V_REF = 5,15 V
DIRECT POWER PEAK SENSOR
SWR >3 ALARM
PW_IN LIMIT
Freq.Out=1KHz
10A=1V
G=13.4
1°C=10mV
Drawn: SSP Divisi Cristiano
Verified: RSH Utimpergher Luciano
AZ000010 M0 - SPE EXPERT 1K-FA
CPU BOARD
ANALOGIC INTERFACE
SCE-PE000066 M3
Date: Tuesday, September 04, 2007
Sheet 6 of 9

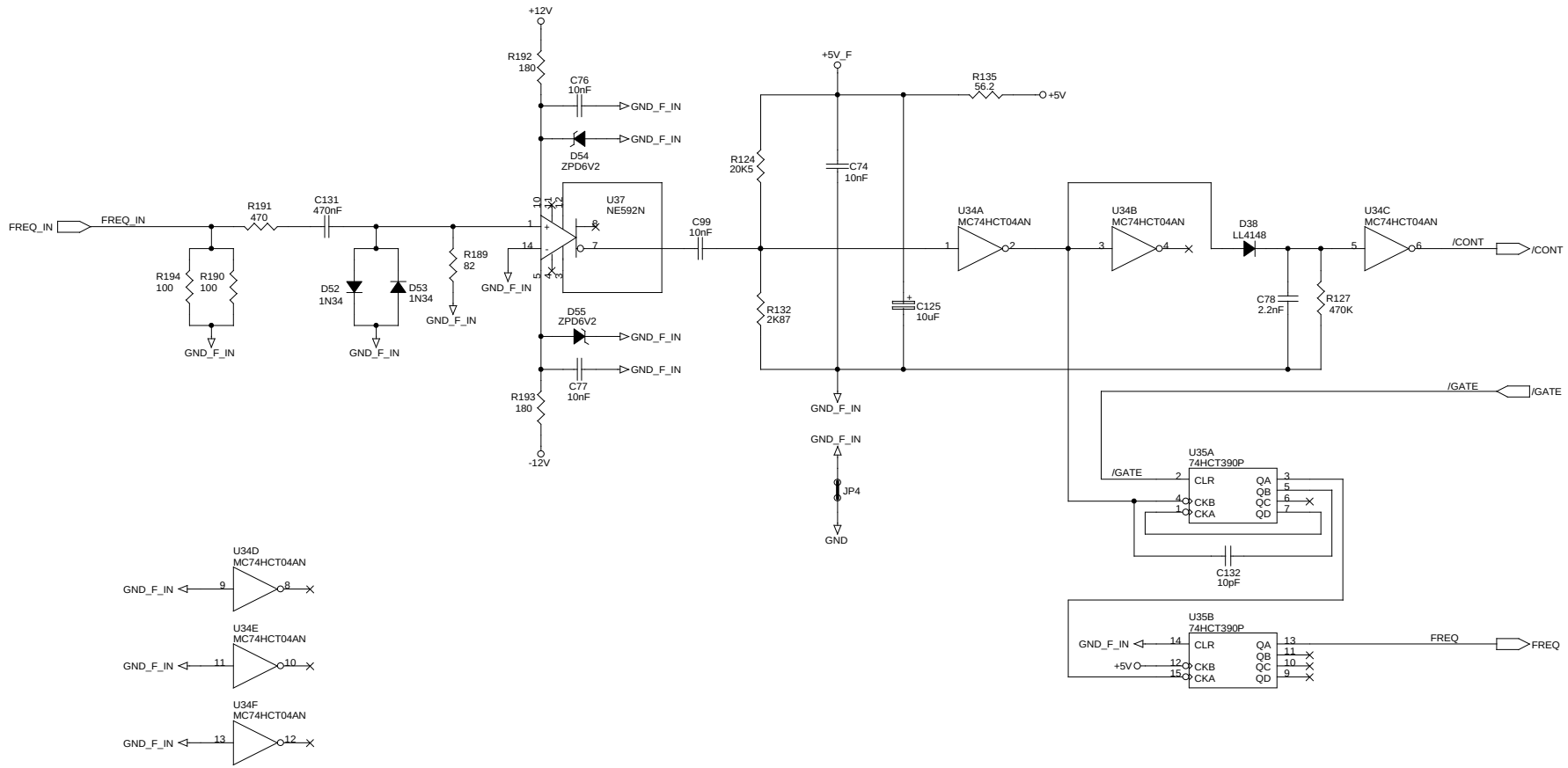

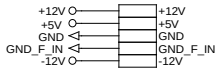

Drawn: SSP Divisi Cristiano
Verified: RSH Utimpergher Luciano

AZ000010 M0 - SPE EXPERT 1K-FA
CPU BOARD

Title: FREQUENCY COUNTER

Size	Document Number	Rev
A3	SCE-PE000066 M3	D

Date: Tuesday, September 04, 2007 Sheet 7 of 9

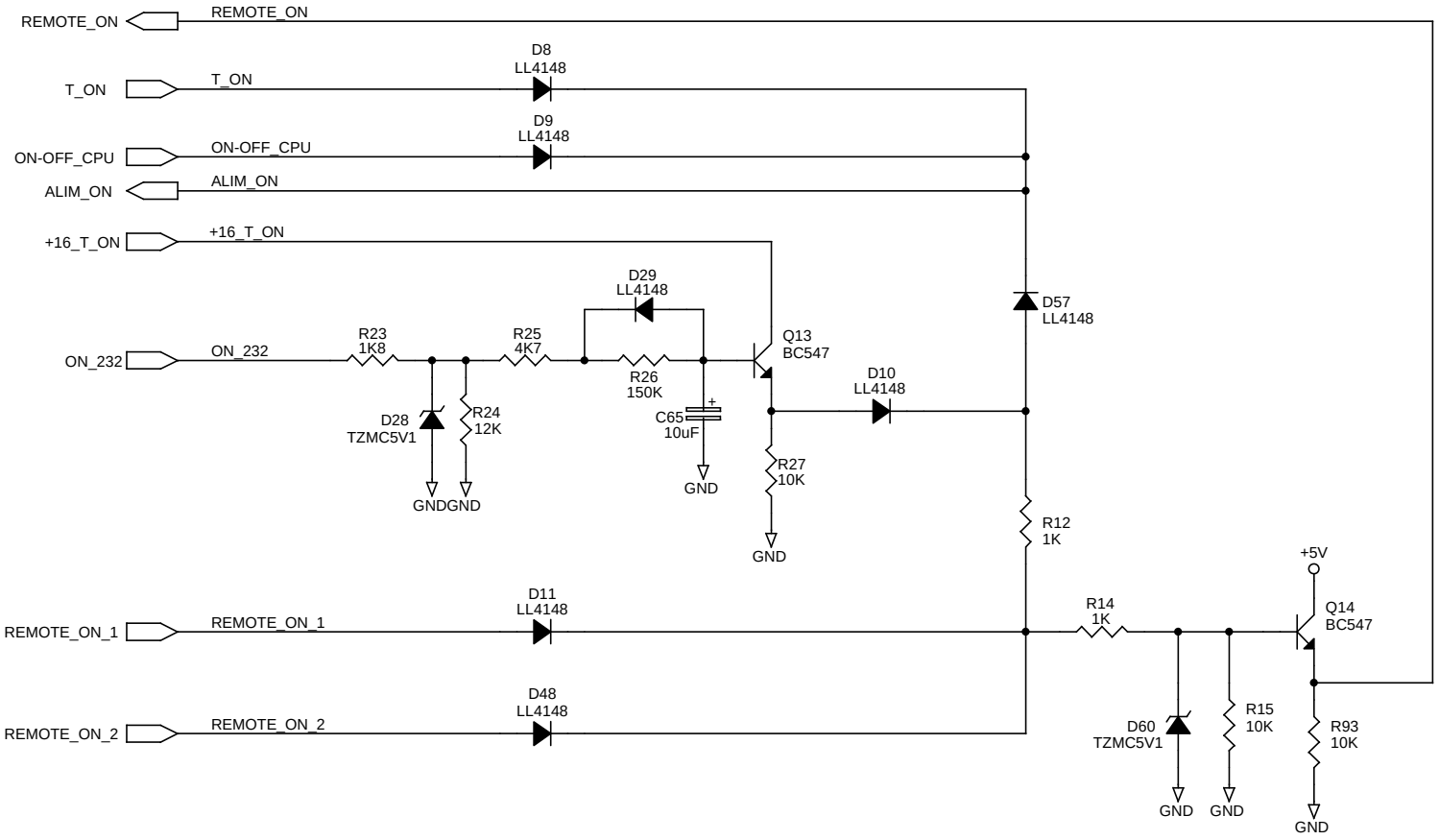

Drawn: SSP Divisi Cristiano
Verified: RSH Utimpergher Luciano

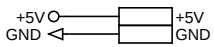

AZ000010 M0 - SPE EXPERT 1K-FA
CPU BOARD

Title
DELAYED IGNITION

Size	Document Number	Rev
A4	SCE-PE000066 M3	D

Date: Tuesday, September 04, 2007 Sheet 8 of 9

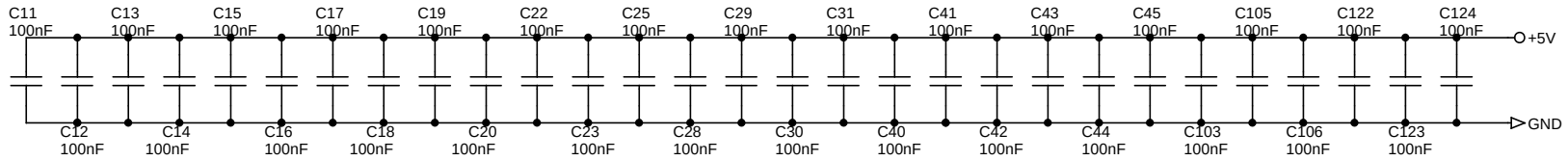

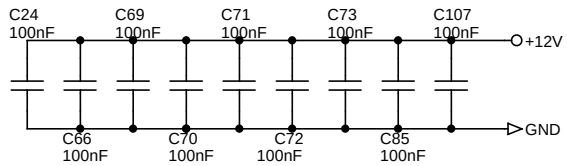

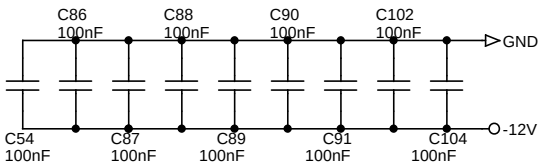

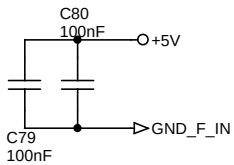

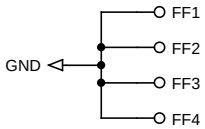

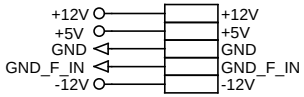

Drawn: SSP Divisi Cristiano
Verified: RSH Utimpergher Luciano

	AZ000010 M0 - SPE EXPERT 1K-FA CPU BOARD
Title	FILTER CAPACITORS
Size A4	Document Number SCE-PE000066 M3 — Rev D
Date: Tuesday, September 04, 2007	Sheet 9 of 9

SOCIETÁ PER L'ELETTRONICA s.r.l.

AMPLIFIER BOARD

SCE-PE000061 MD

CIRCUIT DIAGRAM

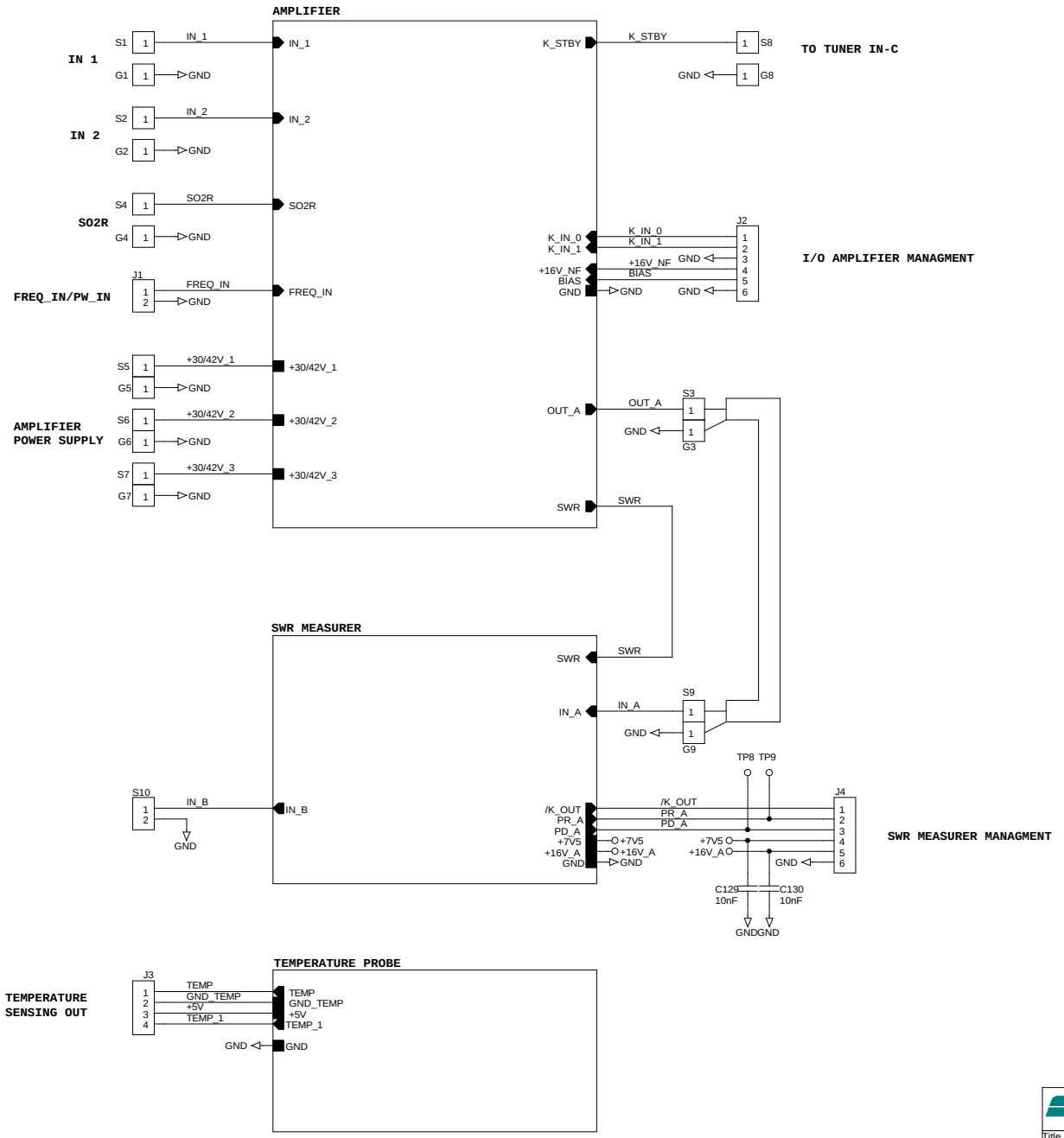

Drawn: SSP Divisi Cristiano
Verified: RSH Utimpergher Luciano

	AZ000010 M0 - SPE EXPERT 1K-FA AMPLIFIER BOARD
Title	BLOCK DIAGRAM
Size A3	Document Number SCE-PE000061 M3 — Rev D
Date: Tuesday, September 04, 2007	Sheet 1 of 4

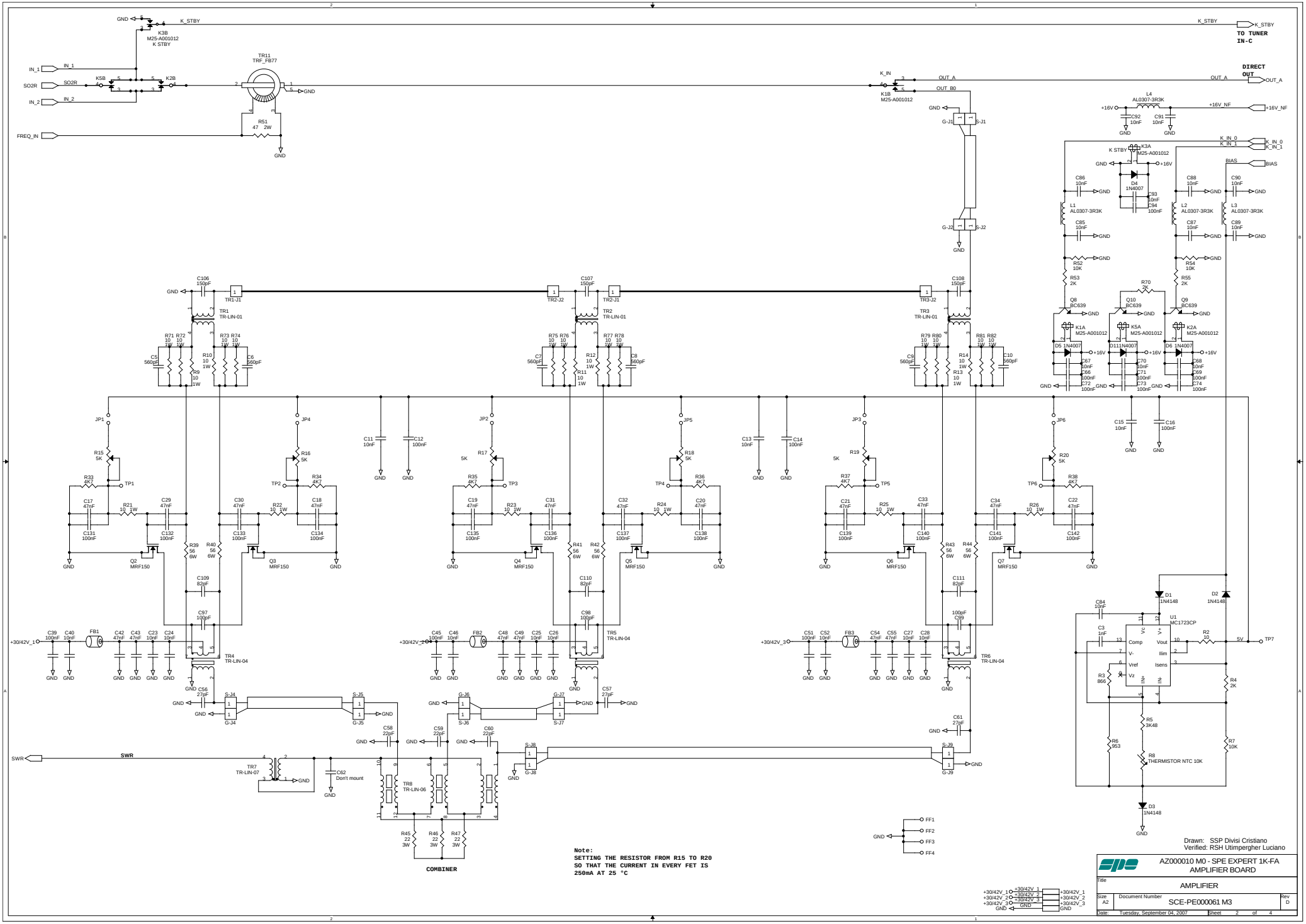
K_STBY
TO TUNER IN-C
DIRECT OUT
IN_1
SO2R
IN_2
FREQ_IN
K3B M25-A001012 K STBY
K5B
K2B
TR11 TRF_FB77
R51 47 2W
K_IN
OUT_A
OUT_B
K1B M25-A001012
L4 AL0307-3R3K
+16V_NF
K_IN_0
K_IN_1
BIAS
K3A M25-A001012
D4 1N4007
L1 AL0307-3R3K
L2 AL0307-3R3K
L3 AL0307-3R3K
R52 10K
R53 2K
R54 10K
R55 2K
R70 2K
Q8 BC639
Q10 BC639
Q9 BC639
K1A M25-A001012
K5A M25-A001012
K2A M25-A001012
D5 1N4007
D11 1N4007
D6 1N4007
TR1 TR-LIN-01
TR2 TR-LIN-01
TR3 TR-LIN-01
TR1-J1
TR2-J2
TR2-J1
TR3-J2
G-J1
S-J1
G-J2
S-J2
Q2 MRF150
Q3 MRF150
Q4 MRF150
Q5 MRF150
Q6 MRF150
Q7 MRF150
TR4 TR-LIN-04
TR5 TR-LIN-04
TR6 TR-LIN-04
+30/42V_1
+30/42V_2
+30/42V_3
FB1
FB2
FB3
S-J4
G-J4
S-J5
G-J5
G-J6
S-J6
G-J7
S-J7
S-J8
G-J8
S-J9
G-J9
SWR
TR7 TR-LIN-07
C62 Don't mount
TR8 TR-LIN-06
R45 22 3W
R46 22 3W
R47 22 3W
COMBINER
D1 1N4148
D2 1N4148
D3 1N4148
U1 MC1723CP
Comp
Vout
V-
Ilim
Vref
Isens
Vz
R2 10
R3 866
R4 2K
R5 3K48
R6 953
R7 10K
R8 THERMISTOR NTC 10K
5V
TP7
FF1
FF2
FF3
FF4
Note:
SETTING THE RESISTOR FROM R15 TO R20
SO THAT THE CURRENT IN EVERY FET IS
250mA AT 25 °C
Drawn: SSP Divisi Cristiano
Verified: RSH Utimpergher Luciano
AZ000010 M0 - SPE EXPERT 1K-FA
AMPLIFIER BOARD
Title
AMPLIFIER
Size A2
Document Number
SCE-PE000061 M3
Rev D
Date: Tuesday, September 04, 2007
Sheet 2 of 4

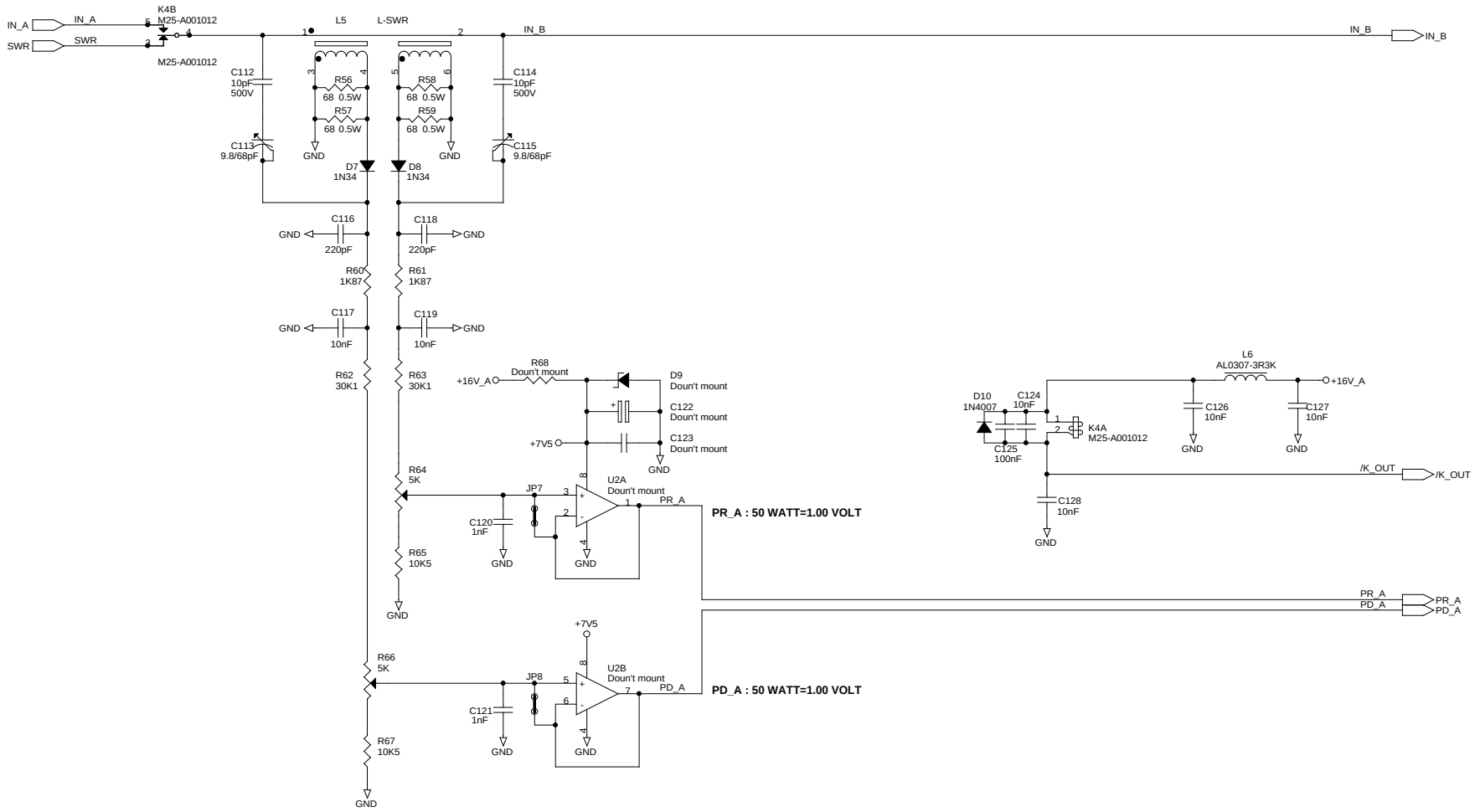

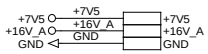

Drawn: SSP Divisi Cristiano
Verified: RSH Utimpergher Luciano

AZ000010 M0 - SPE EXPERT 1K-FA AMPLIFIER BOARD		
Title: SWR MEASURER		
Size: A3	Document Number: SCE-PE000061 M3	Rev: D
Date: Tuesday, September 04, 2007	Sheet 3 of 4	

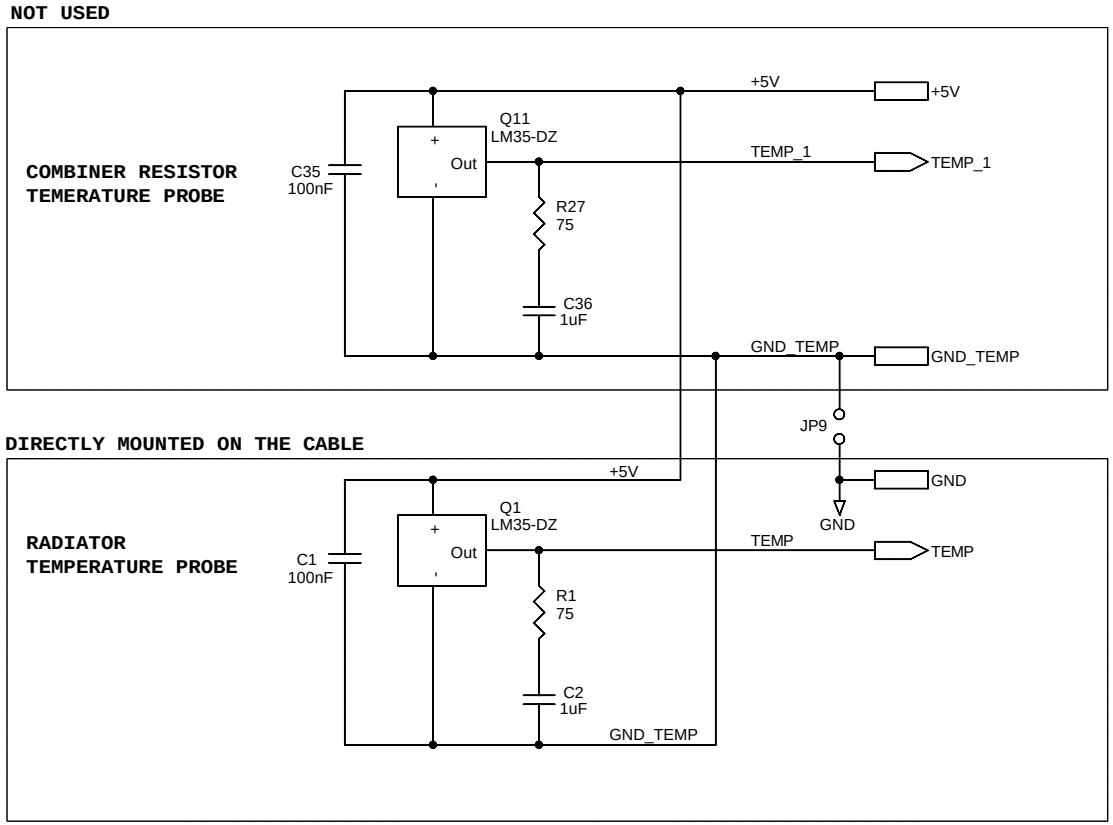

Drawn: SSP Divisi Cristiano
Verified: RSH Utimpergher Luciano

	AZ000010 M0 - SPE EXPERT 1K-FA AMPLIFIER BOARD
Title	TEMPERATURE PROBE
Size A4	Document Number SCE-PE000061 M3 — Rev D
Date: Tuesday, September 04, 2007	Sheet 4 of 4

SOCIETÁ PER L'ELETTRONICA s.r.l.

AUTOMATIC TUNER BOARD

SCE-PE000060 MC

CIRCUIT DIAGRAM

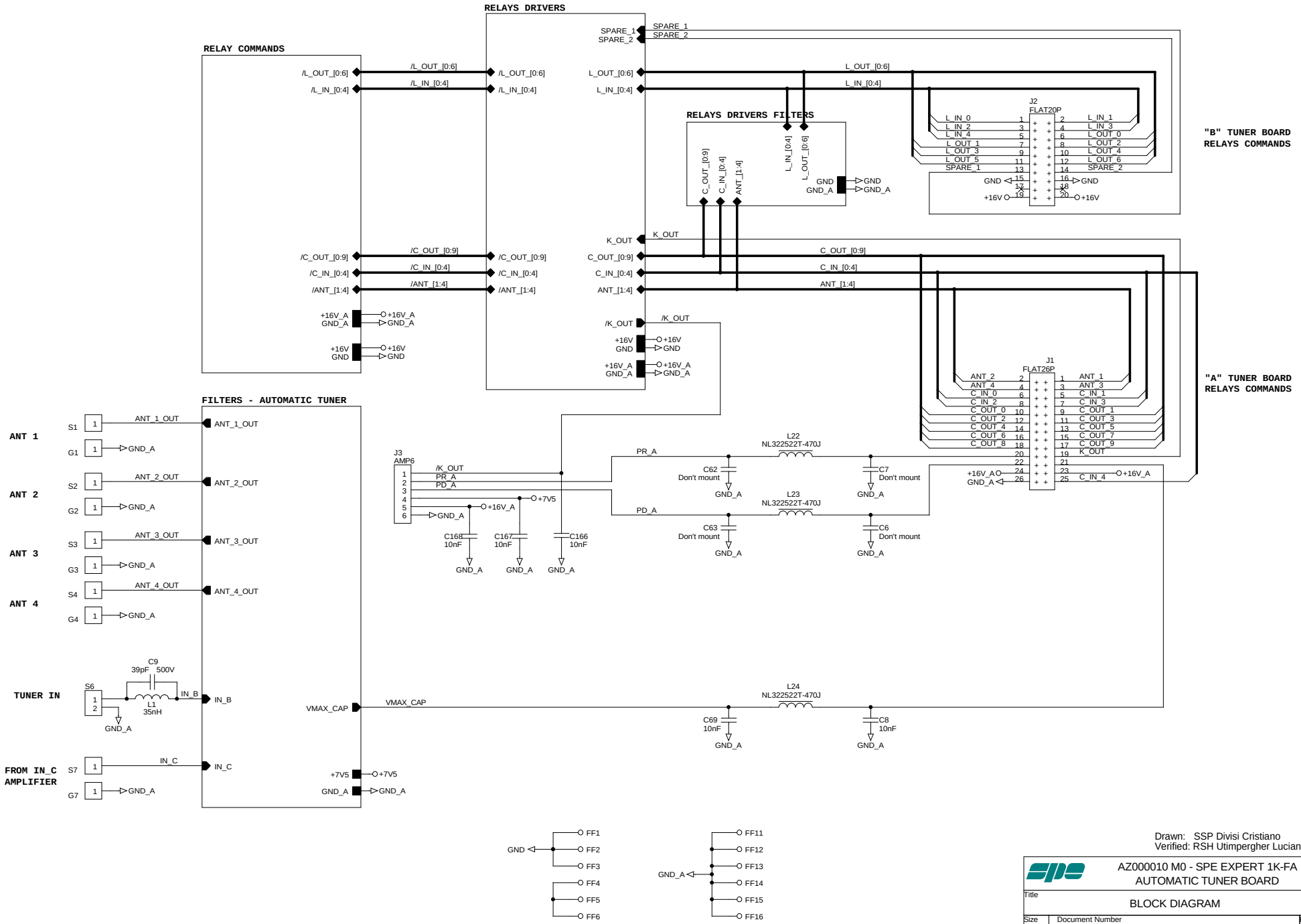

Drawn: SSP Divisi Cristiano
Verified: RSH Utimpergher Luciano

AZ000010 M0 - SPE EXPERT 1K-FA
AUTOMATIC TUNER BOARD

Title: BLOCK DIAGRAM

Size	Document Number	Rev
A3	SCE-PE000060 M2	B

Date: Tuesday, September 04, 2007 Sheet 1 of 5

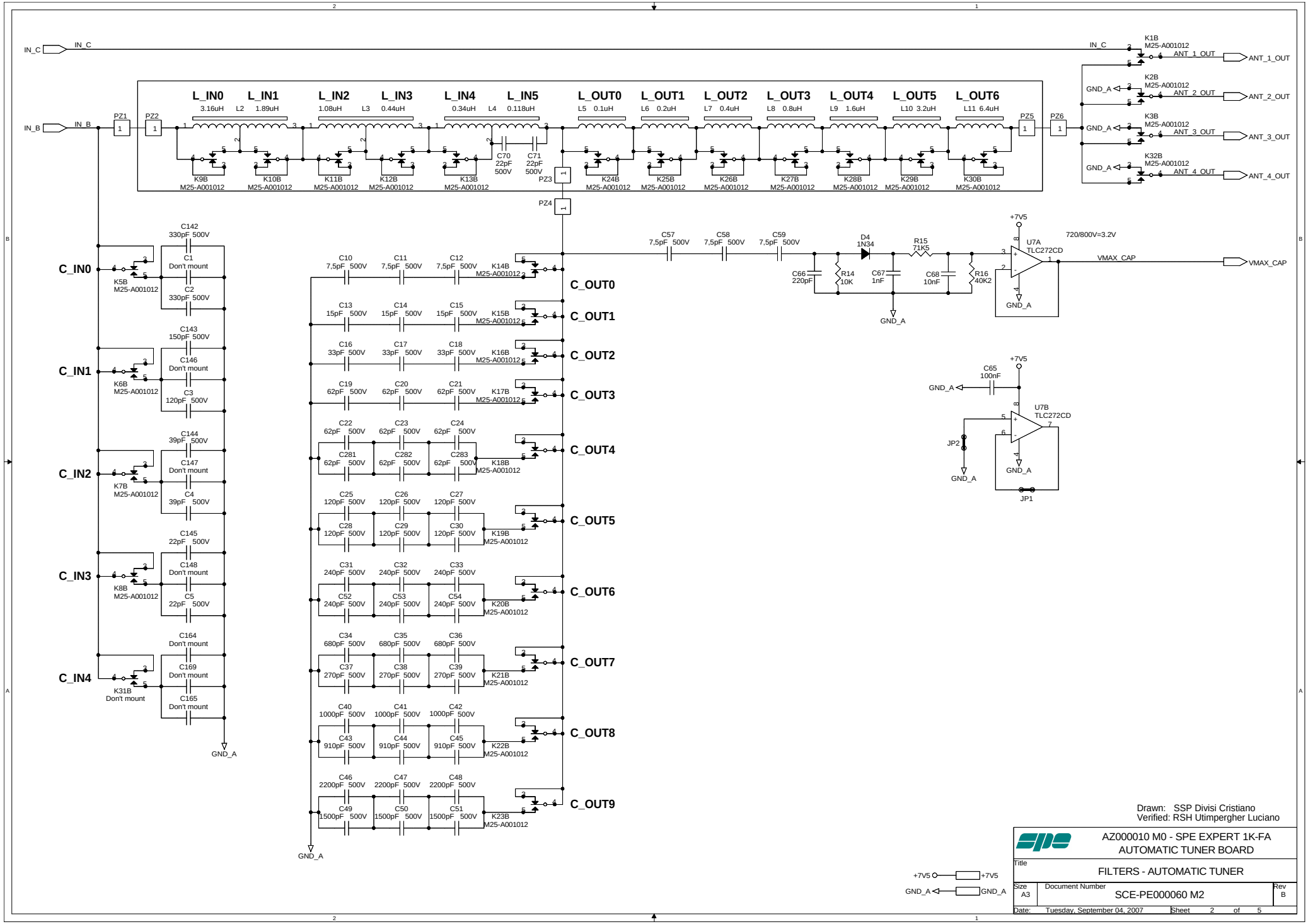
IN_C
IN_B
PZ1
PZ2
L_IN0 3.16uH
L_IN1 L2 1.89uH
L_IN2 1.08uH
L_IN3 L3 0.44uH
L_IN4 0.34uH
L_IN5 L4 0.118uH
L_OUT0 L5 0.1uH
L_OUT1 L6 0.2uH
L_OUT2 L7 0.4uH
L_OUT3 L8 0.8uH
L_OUT4 L9 1.6uH
L_OUT5 L10 3.2uH
L_OUT6 L11 6.4uH
PZ5
PZ6
PZ3
PZ4
C70 22pF 500V
C71 22pF 500V
K9B M25-A001012
K10B M25-A001012
K11B M25-A001012
K12B M25-A001012
K13B M25-A001012
K24B M25-A001012
K25B M25-A001012
K26B M25-A001012
K27B M25-A001012
K28B M25-A001012
K29B M25-A001012
K30B M25-A001012
K1B M25-A001012
K2B M25-A001012
K3B M25-A001012
K32B M25-A001012
ANT_1_OUT
ANT_2_OUT
ANT_3_OUT
ANT_4_OUT
GND_A
C_IN0
C_IN1
C_IN2
C_IN3
C_IN4
K5B M25-A001012
K6B M25-A001012
K7B M25-A001012
K8B M25-A001012
K31B Don't mount
C142 330pF 500V
C1 Don't mount
C2 330pF 500V
C143 150pF 500V
C146 Don't mount
C3 120pF 500V
C144 39pF 500V
C147 Don't mount
C4 39pF 500V
C145 22pF 500V
C148 Don't mount
C5 22pF 500V
C164 Don't mount
C169 Don't mount
C165 Don't mount
C_OUT0
C_OUT1
C_OUT2
C_OUT3
C_OUT4
C_OUT5
C_OUT6
C_OUT7
C_OUT8
C_OUT9
C10 7,5pF 500V
C11 7,5pF 500V
C12 7,5pF 500V
K14B M25-A001012
C13 15pF 500V
C14 15pF 500V
C15 15pF 500V
K15B M25-A001012
C16 33pF 500V
C17 33pF 500V
C18 33pF 500V
K16B M25-A001012
C19 62pF 500V
C20 62pF 500V
C21 62pF 500V
K17B M25-A001012
C22 62pF 500V
C23 62pF 500V
C24 62pF 500V
C281 62pF 500V
C282 62pF 500V
C283 62pF 500V
K18B M25-A001012
C25 120pF 500V
C26 120pF 500V
C27 120pF 500V
C28 120pF 500V
C29 120pF 500V
C30 120pF 500V
K19B M25-A001012
C31 240pF 500V
C32 240pF 500V
C33 240pF 500V
C52 240pF 500V
C53 240pF 500V
C54 240pF 500V
K20B M25-A001012
C34 680pF 500V
C35 680pF 500V
C36 680pF 500V
C37 270pF 500V
C38 270pF 500V
C39 270pF 500V
K21B M25-A001012
C40 1000pF 500V
C41 1000pF 500V
C42 1000pF 500V
C43 910pF 500V
C44 910pF 500V
C45 910pF 500V
K22B M25-A001012
C46 2200pF 500V
C47 2200pF 500V
C48 2200pF 500V
C49 1500pF 500V
C50 1500pF 500V
C51 1500pF 500V
K23B M25-A001012
C57 7,5pF 500V
C58 7,5pF 500V
C59 7,5pF 500V
D4 1N34
R15 71K5
C66 220pF
R14 10K
C67 1nF
C68 10nF
R16 40K2
+7V5
U7A TLC272CD
720/800V=3.2V
VMAX_CAP
C65 100nF
U7B TLC272CD
JP2
JP1
Drawn: SSP Divisi Cristiano
Verified: RSH Utimpergher Luciano
AZ000010 M0 - SPE EXPERT 1K-FA
AUTOMATIC TUNER BOARD
Title
FILTERS - AUTOMATIC TUNER
Size A3
Document Number
SCE-PE000060 M2
Rev B
Date: Tuesday, September 04, 2007
Sheet 2 of 5

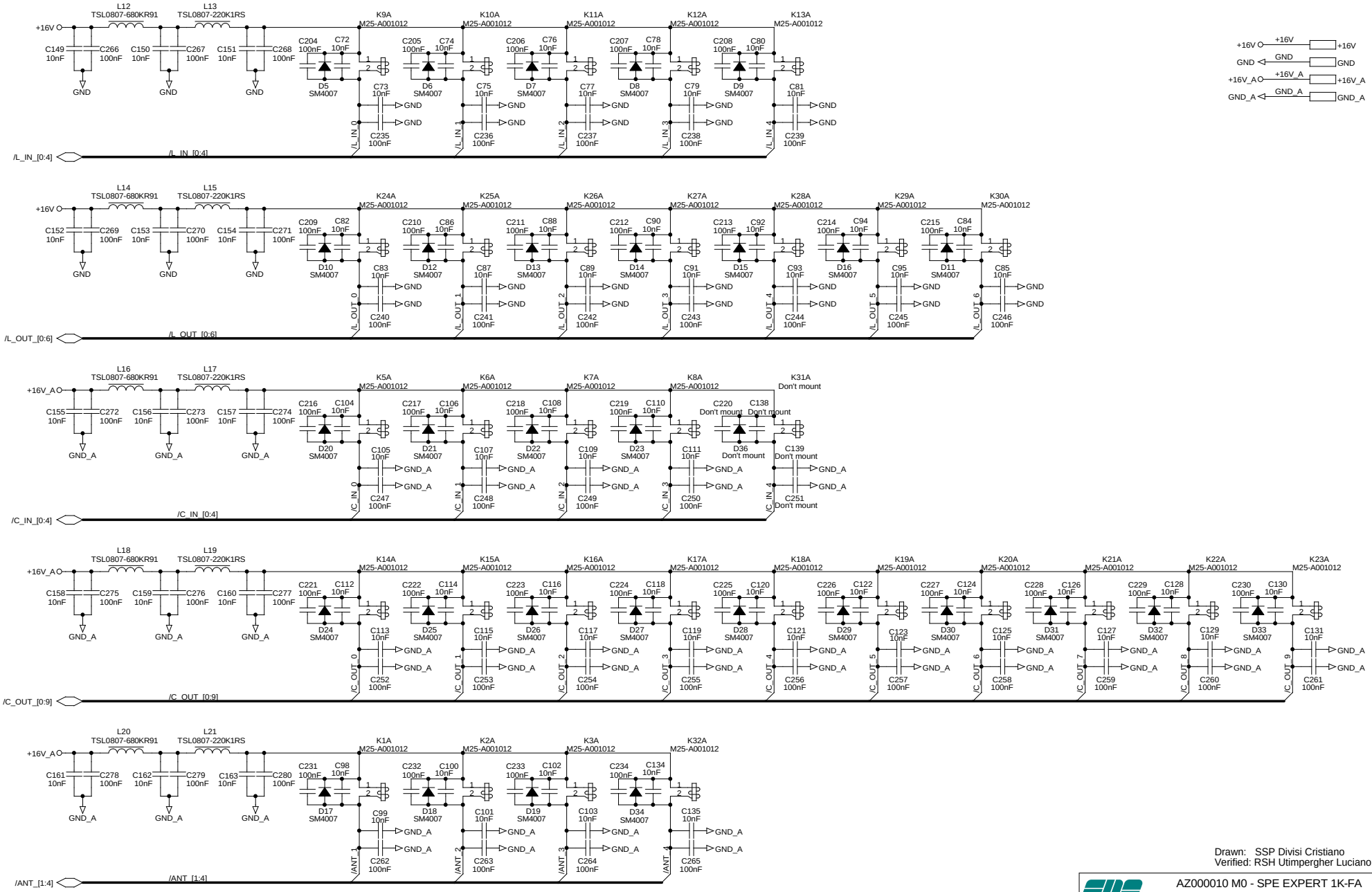

Drawn: SSP Divisi Cristiano
Verified: RSH Utimpergher Luciano

	AZ000010 M0 - SPE EXPERT 1K-FA AUTOMATIC TUNER BOARD
Title	RELAYS COMMANDS
Size A3 / Document Number	SCE-PE000060 M2 / Rev B
Date: Tuesday, September 04, 2007	Sheet 3 of 5

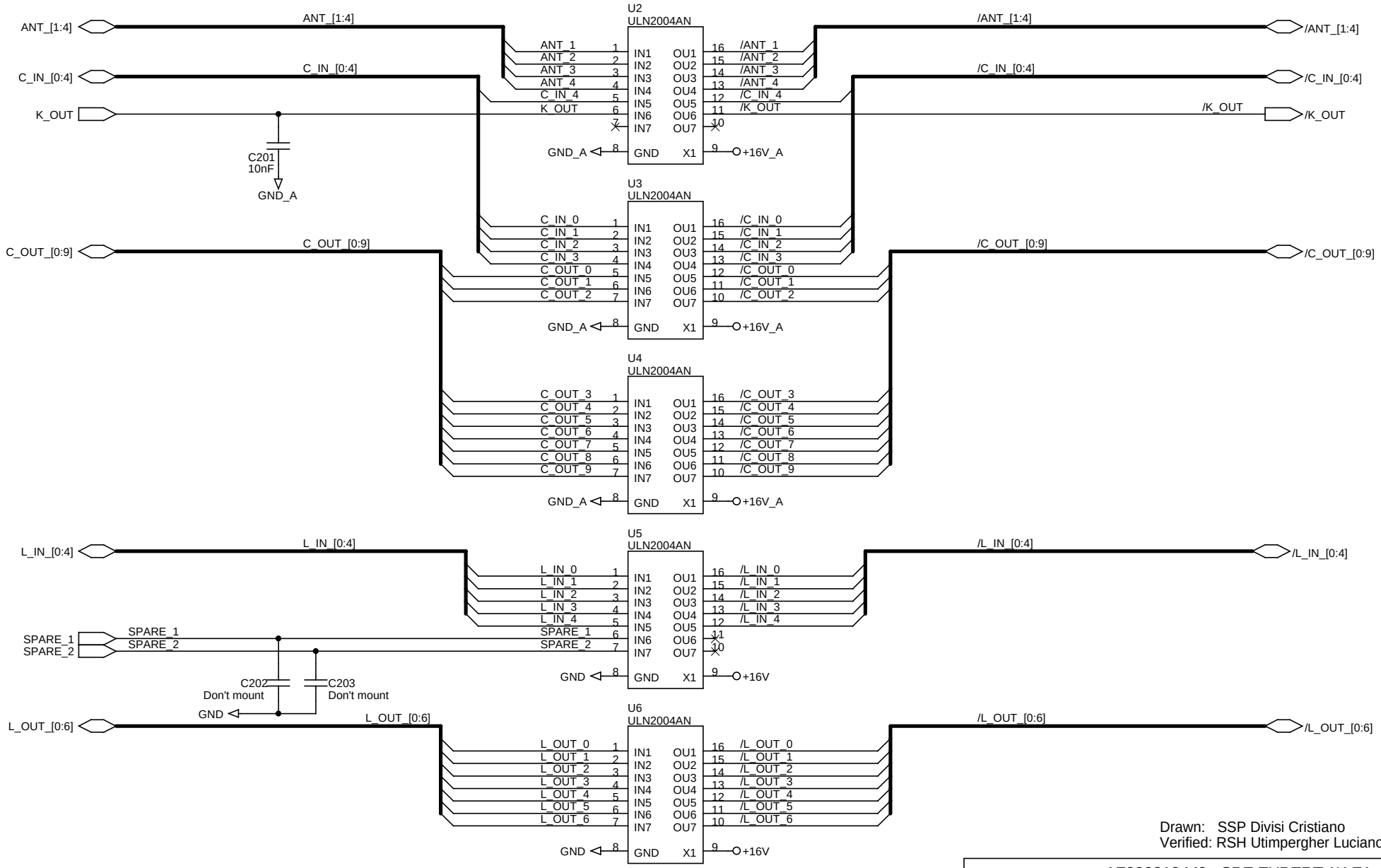

Drawn: SSP Divisi Cristiano
Verified: RSH Utimpergher Luciano

AZ000010 M0 - SPE EXPERT 1K-FA
AUTOMATIC TUNER BOARD

Title: RELAYS DRIVERS

Size: A4 | Document Number: SCE-PE000060 M2 | Rev: B

Date: Tuesday, September 04, 2007 | Sheet 4 of 5

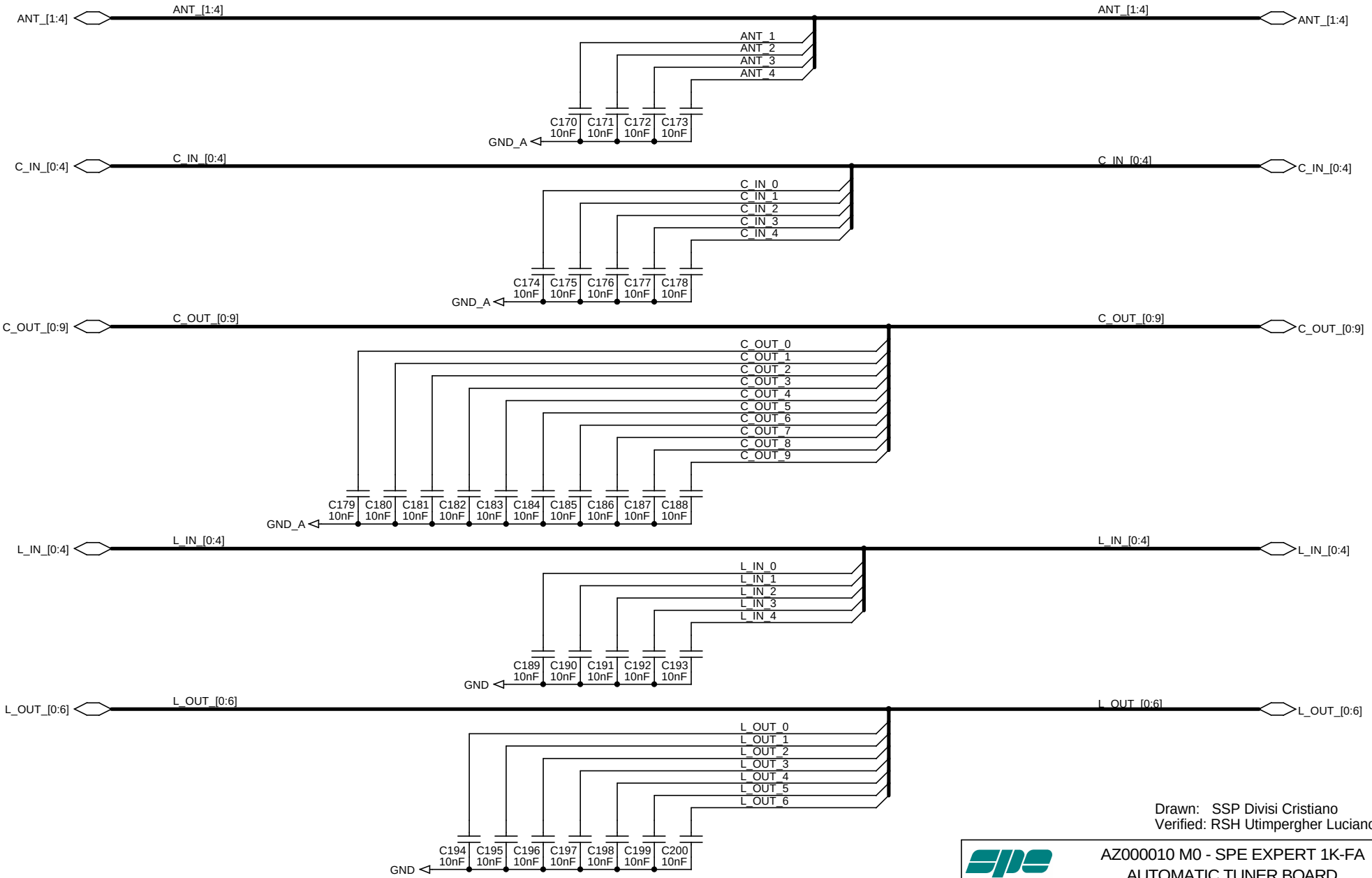

Drawn: SSP Divisi Cristiano
Verified: RSH Utimpergher Luciano

AZ000010 M0 - SPE EXPERT 1K-FA
AUTOMATIC TUNER BOARD

Title: RELAYS DRIVERS FILTER

Size	Document Number	Rev
A4	SCE-PE000060 M2	B

Date: Tuesday, September 04, 2007 Sheet 5 of 5

SOCIETÁ PER L'ELETTRONICA s.r.l.

220VAC BOARD

SCE-PE000065 MC

CIRCUIT DIAGRAM

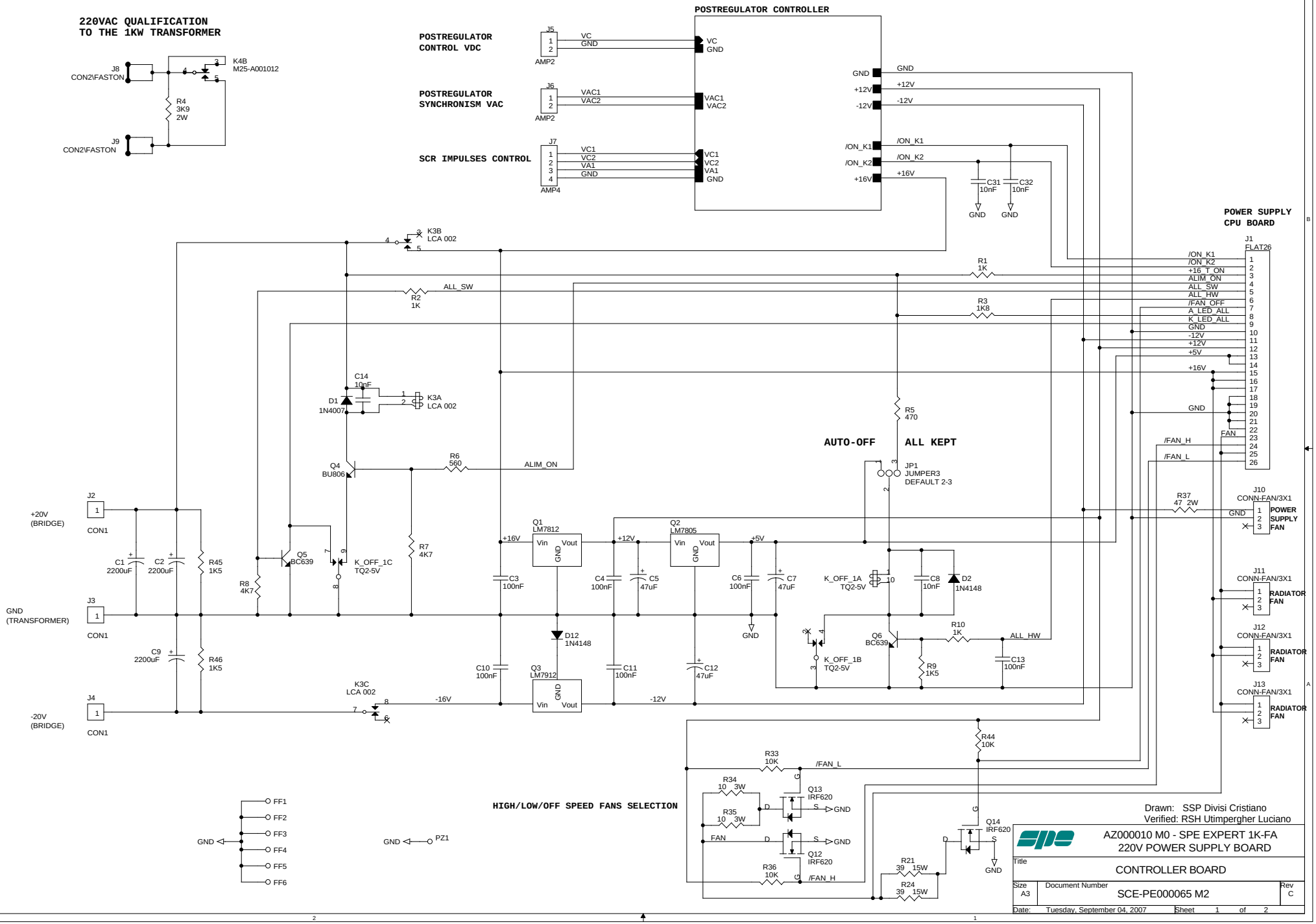
220VAC QUALIFICATION
TO THE 1KW TRANSFORMER
J8
CON2\FASTON
J9
CON2\FASTON
K4B
M25-A001012
R4
3K9
2W
POSTREGULATOR CONTROLLER
POSTREGULATOR
CONTROL VDC
J5
AMP2
VC
GND
POSTREGULATOR
SYNCHRONISM VAC
J6
AMP2
VAC1
VAC2
SCR IMPULSES CONTROL
J7
AMP4
VC1
VC2
VA1
GND
+12V
-12V
/ON_K1
/ON_K2
+16V
C31
10nF
C32
10nF
POWER SUPPLY
CPU BOARD
J1
FLAT26
/ON_K1
/ON_K2
+16_T_ON
ALIM_ON
ALL_SW
ALL_HW
/FAN_OFF
A_LED_ALL
K_LED_ALL
+5V
FAN
/FAN_H
/FAN_L
K3B
LCA 002
R1
1K
R2
1K
R3
1K8
C14
10nF
D1
1N4007
K3A
LCA 002
R5
470
Q4
BU806
R6
560
ALIM_ON
AUTO-OFF
ALL KEPT
JP1
JUMPER3
DEFAULT 2-3
J2
CON1
+20V
(BRIDGE)
J3
CON1
GND
(TRANSFORMER)
J4
CON1
-20V
(BRIDGE)
C1
2200uF
C2
2200uF
R45
1K5
R46
1K5
C9
2200uF
R8
4K7
Q5
BC639
K_OFF_1C
TQ2-5V
R7
4K7
Q1
LM7812
Vin
Vout
GND
Q2
LM7805
Q3
LM7912
C3
100nF
C4
100nF
C5
47uF
C6
100nF
C7
47uF
C8
10nF
D2
1N4148
K_OFF_1A
TQ2-5V
K_OFF_1B
TQ2-5V
Q6
BC639
R10
1K
R9
1K5
C13
100nF
D12
1N4148
C10
100nF
C11
100nF
C12
47uF
K3C
LCA 002
-16V
-12V
R37
47 2W
J10
CONN-FAN/3X1
POWER
SUPPLY
FAN
J11
CONN-FAN/3X1
RADIATOR
FAN
J12
CONN-FAN/3X1
RADIATOR
FAN
J13
CONN-FAN/3X1
RADIATOR
FAN
R44
10K
HIGH/LOW/OFF SPEED FANS SELECTION
R33
10K
R34
10 3W
R35
10 3W
R36
10K
Q13
IRF620
Q12
IRF620
Q14
IRF620
R21
39 15W
R24
39 15W
FF1
FF2
FF3
FF4
FF5
FF6
PZ1
Drawn: SSP Divisi Cristiano
Verified: RSH Utimpergher Luciano
AZ000010 M0 - SPE EXPERT 1K-FA
220V POWER SUPPLY BOARD
Title
CONTROLLER BOARD
Size
A3
Document Number
SCE-PE000065 M2
Rev
C
Date: Tuesday, September 04, 2007
Sheet 1 of 2

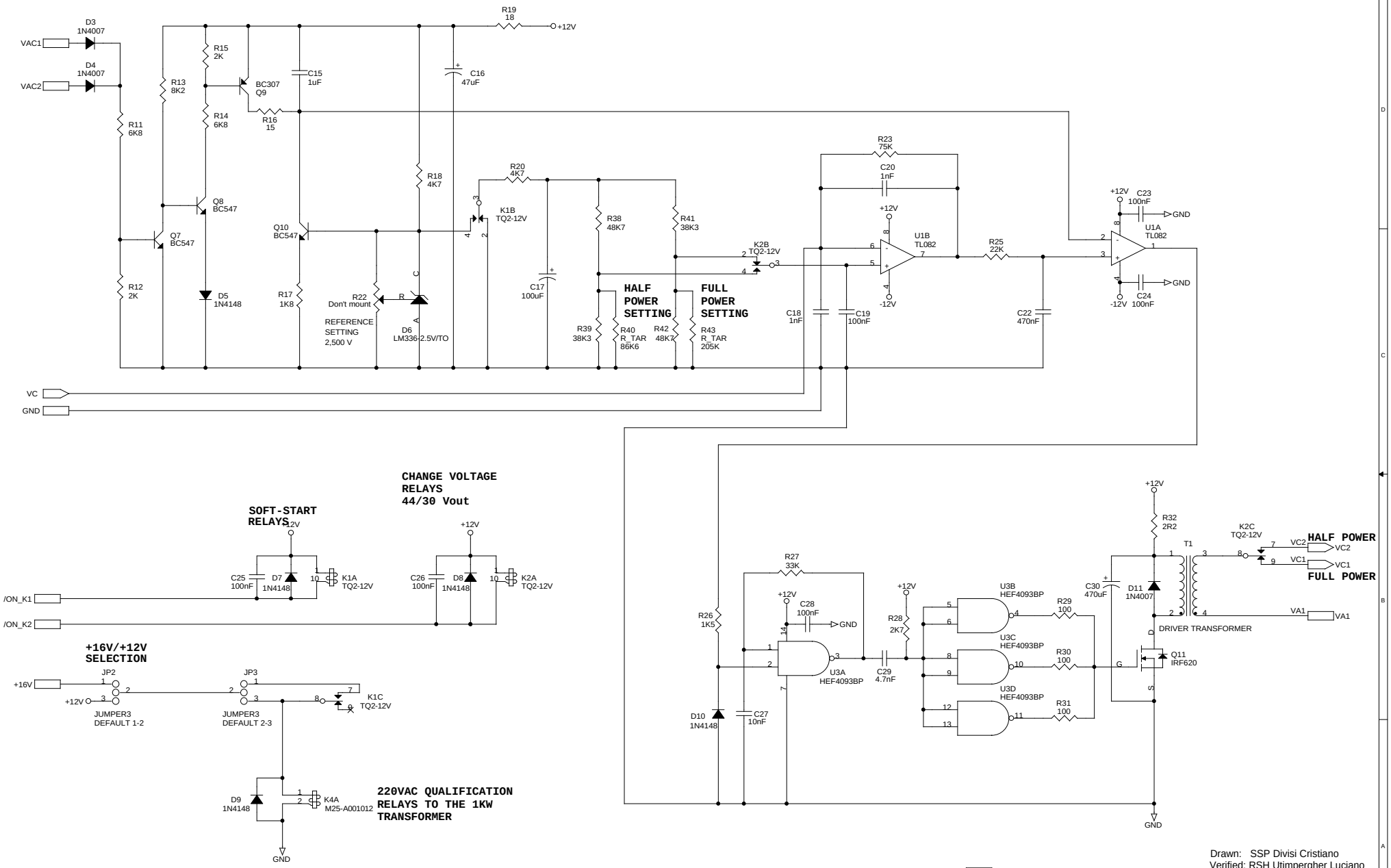

Drawn: SSP Divisi Cristiano
Verified: RSH Utimpergher Luciano

AZ000010 M0 - SPE EXPERT 1K-FA
220V POWER SUPPLY BOARD

Title: POSTREGULATOR CONTROLLER

Size	Document Number	Rev
A3	SCE-PE000065 M2	C

Date: Tuesday, September 04, 2007 Sheet 1 of 2

SOCIETÁ PER L'ELETTRONICA s.r.l.

48VDC BOARD

SCE-PE000064 MB

CIRCUIT DIAGRAM

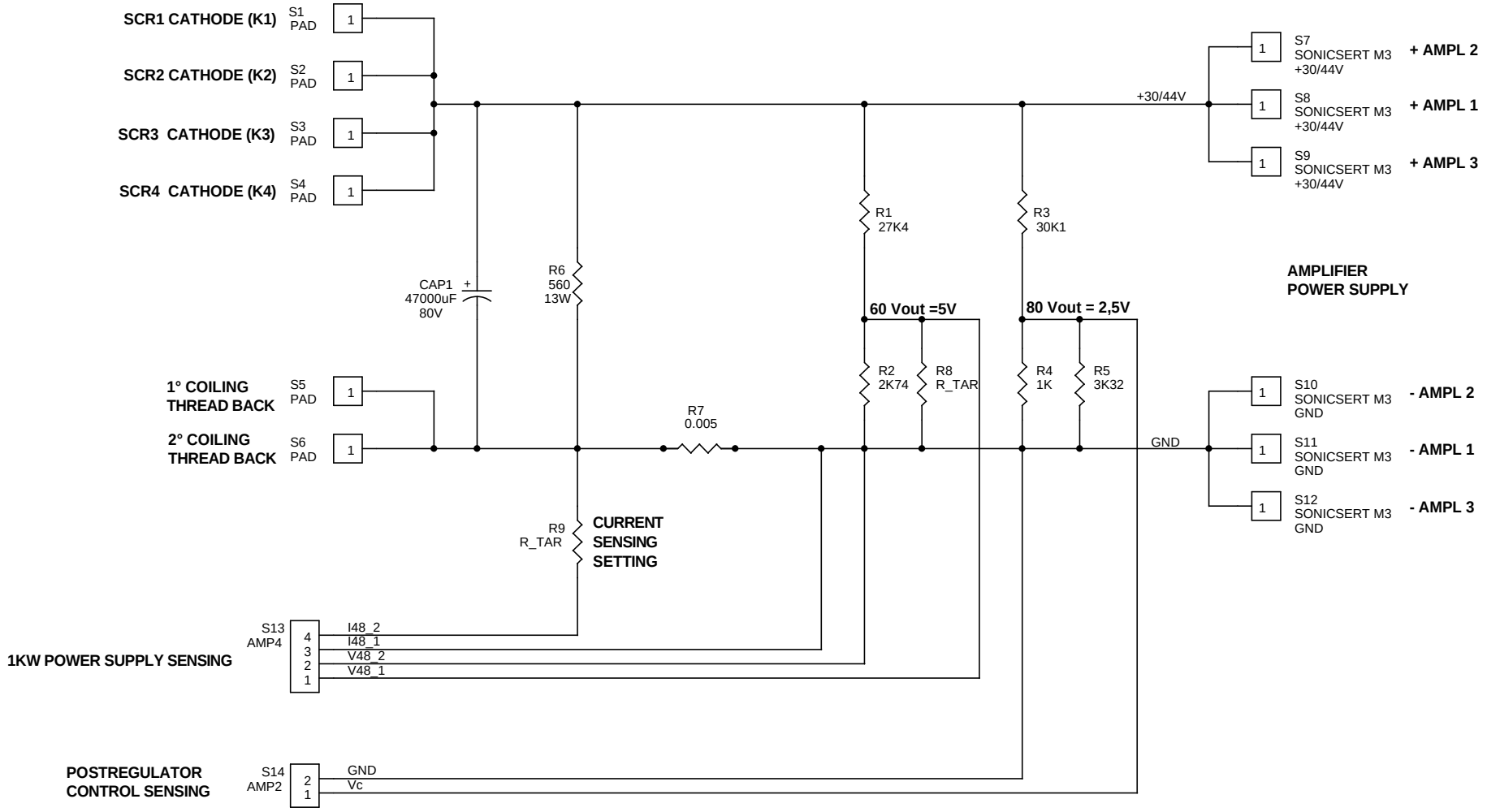

Drawn: SSP Divisi Cristiano
Verified: RSH Utimpergher Luciano

AZ000010 M0 - EXPERT 1K-FA
48VDC BOARD

Title	48VDC BOARD	
Size A4	Document Number SCE-PE000064 M1	Rev B
Date: Tuesday, September 04, 2007	Sheet 1 of 1	

SOCIETÁ PER L'ELETTRONICA s.r.l.

SCR BOARD

SCE-PE000067 MB

CIRCUIT DIAGRAM

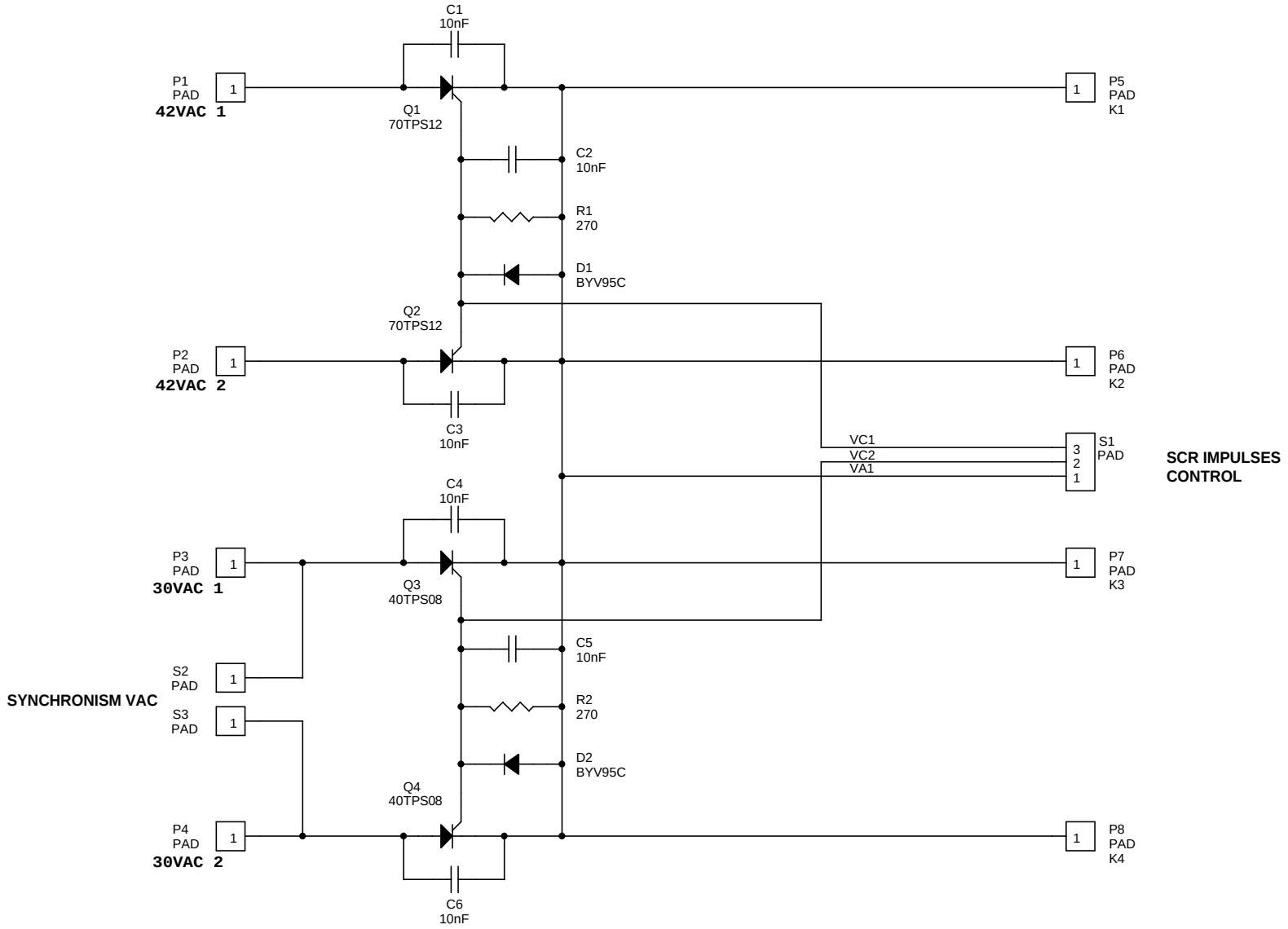

Drawn: SSP Divisi Cristiano
Verified: RSH Utimpergher Luciano

AZ000010 M0 - SPE EXPERT 1K-FA
SCR BOARD

Title	SCR BOARD	
Size A4	Document Number SCE-PE000067 M1	Rev B
Date: Tuesday, September 04, 2007	Sheet 1 of 1	

SOCIETÁ PER L'ELETTRONICA s.r.l.

CHANGE VOLTAGE BOARD

SCE-PE000068 MB

CIRCUIT DIAGRAM

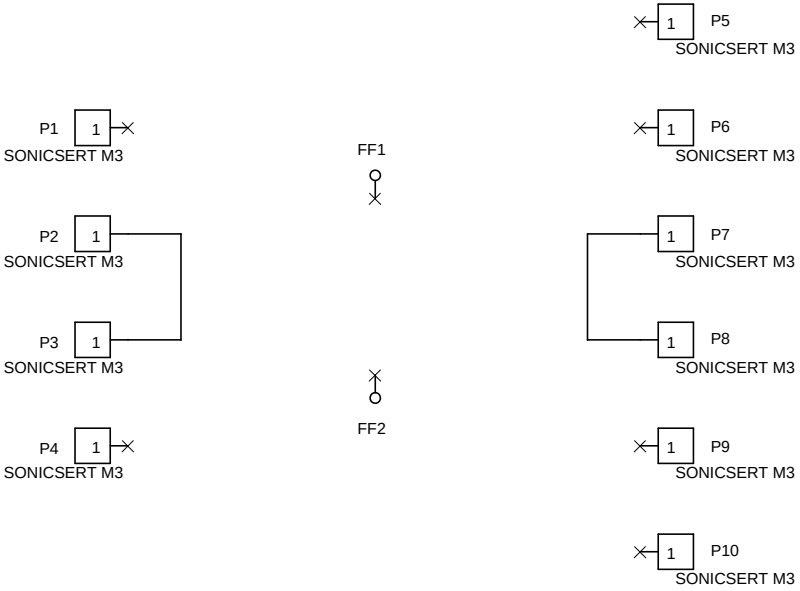

Drawn: SSP Divisi Cristiano
Verified: RSH Utimpergher Luciano

	AZ000010 M0 - SPE EXPERT 1K-FA CHANGE VOLTAGE BOARD
Title	CHANGE VOLTAGE BOARD
Size A4	Document Number SCE-PE000068 M1 — Rev B
Date: Monday, September 03, 2007	Sheet 1 of 1

SOCIETÁ PER L'ELETTRONICA s.r.l.

CPU BOARD

DMP-PE000066 MD

PCB BOARD VIEW

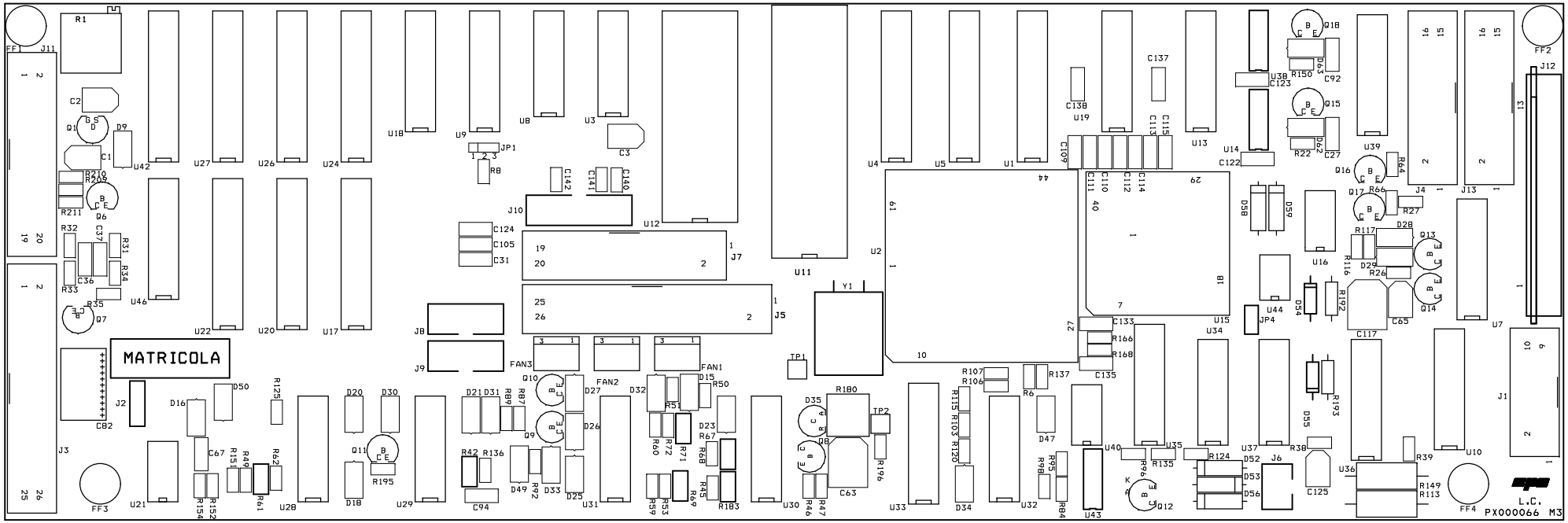

AZ000010 MO EXPERT 1K-FA LINEAR AMPLIFIER
CPU BOARD
Cod. Doc.: DMP-PE000066 MD
Drawn: DIVISI CRISTIANO
Verified: UTIMPERGHER LUCIANO
Date: 2007/05/09
Pag. 1 di 2

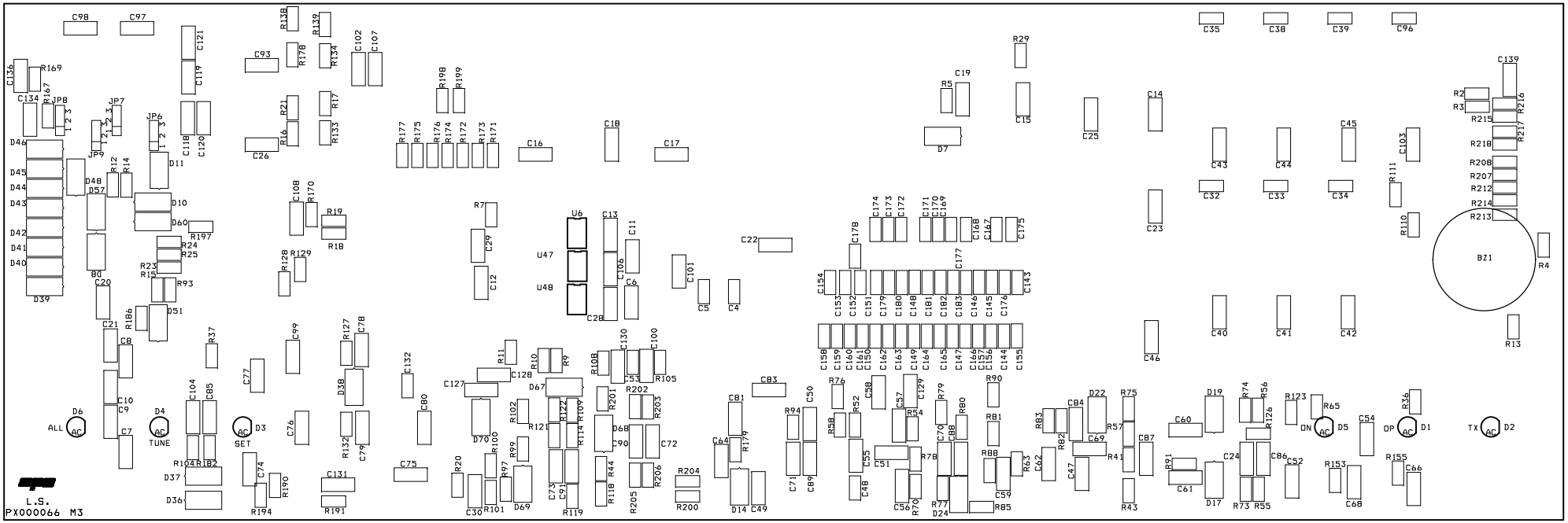

AZ000010 M0 EXPERT 1K-FA LINEAR AMPLIFIER
CPU BOARD
Cod. Doc.: DMP-PE000066 MD
Drawn: DIVISI CRISTIANO
Verified: UTIMPERGHER LUCIANO
Date: 2007/05/09
Pag. 2 di 2

SOCIETÁ PER L'ELETTRONICA s.r.l.

AMPLIFIER BOARD

DMP-PE000061 MD

PCB BOARD VIEW

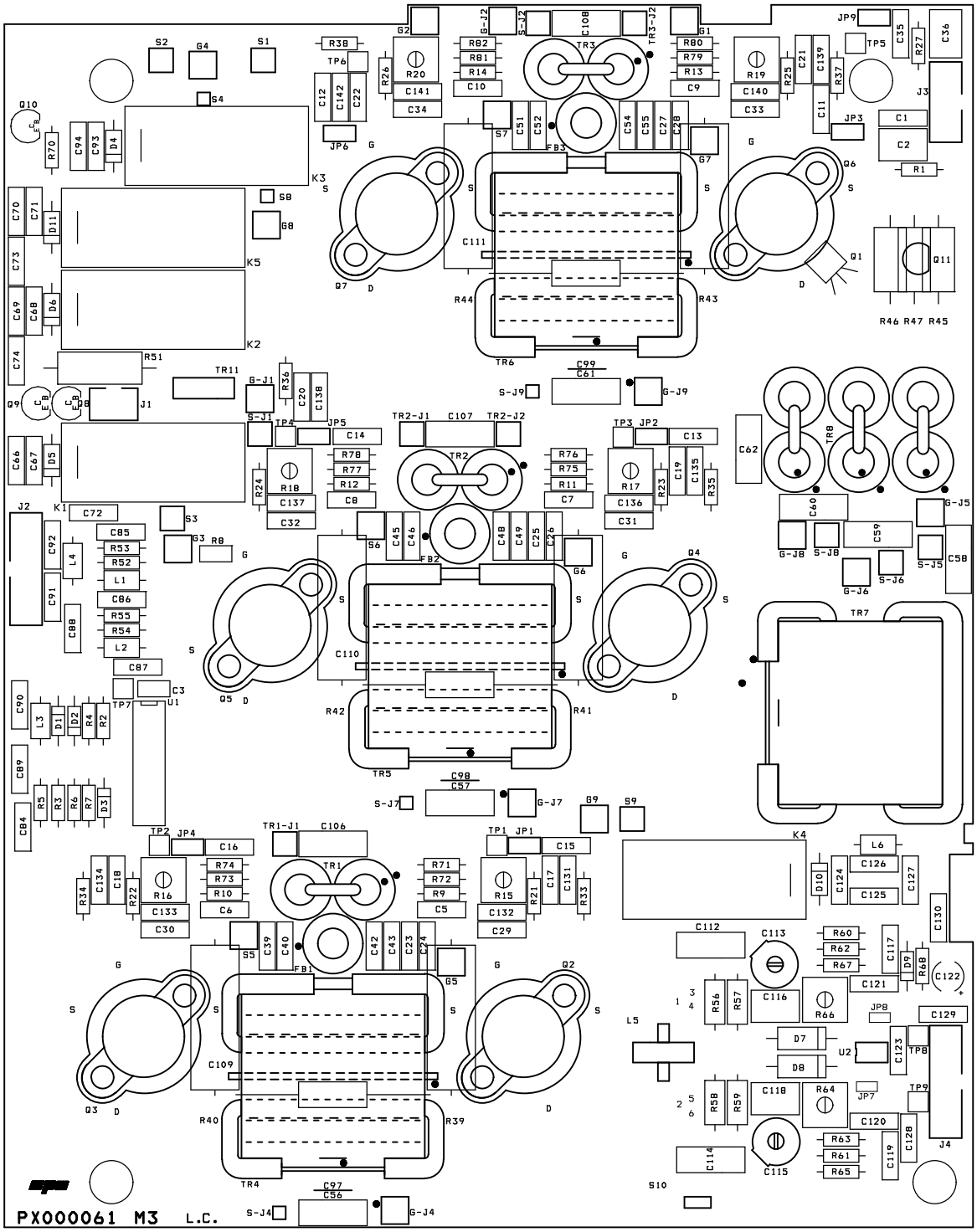

AZ000010 MO EXPERT 1K-FA LINEAR AMPLIFIER
AMPLIFIER BOARD
Cod. Doc.: DMP-PE000061 MD
Drawn: DIVISI CRISTIANO
Verified: UTIMPERGHER LUCIANO
Date: 2007/04/24
Pag. 1 di 1

SOCIETÁ PER L'ELETTRONICA s.r.l.

AUTOMATIC TUNER BOARD

DMP-PE000060 MC

PCB BOARD VIEW

AZ000010 M0 EXPERT 1K-FA LINEAR AMPLIFIER
AUTOMATIC TUNER BOARD
Cod. Doc.: DMP-PE000060 MC
Drawn: DIVISI CRISTIANO
Verified: UTIMPERGHER LUCIANO
Date: 2007/03/26
Pag. 1 di 2

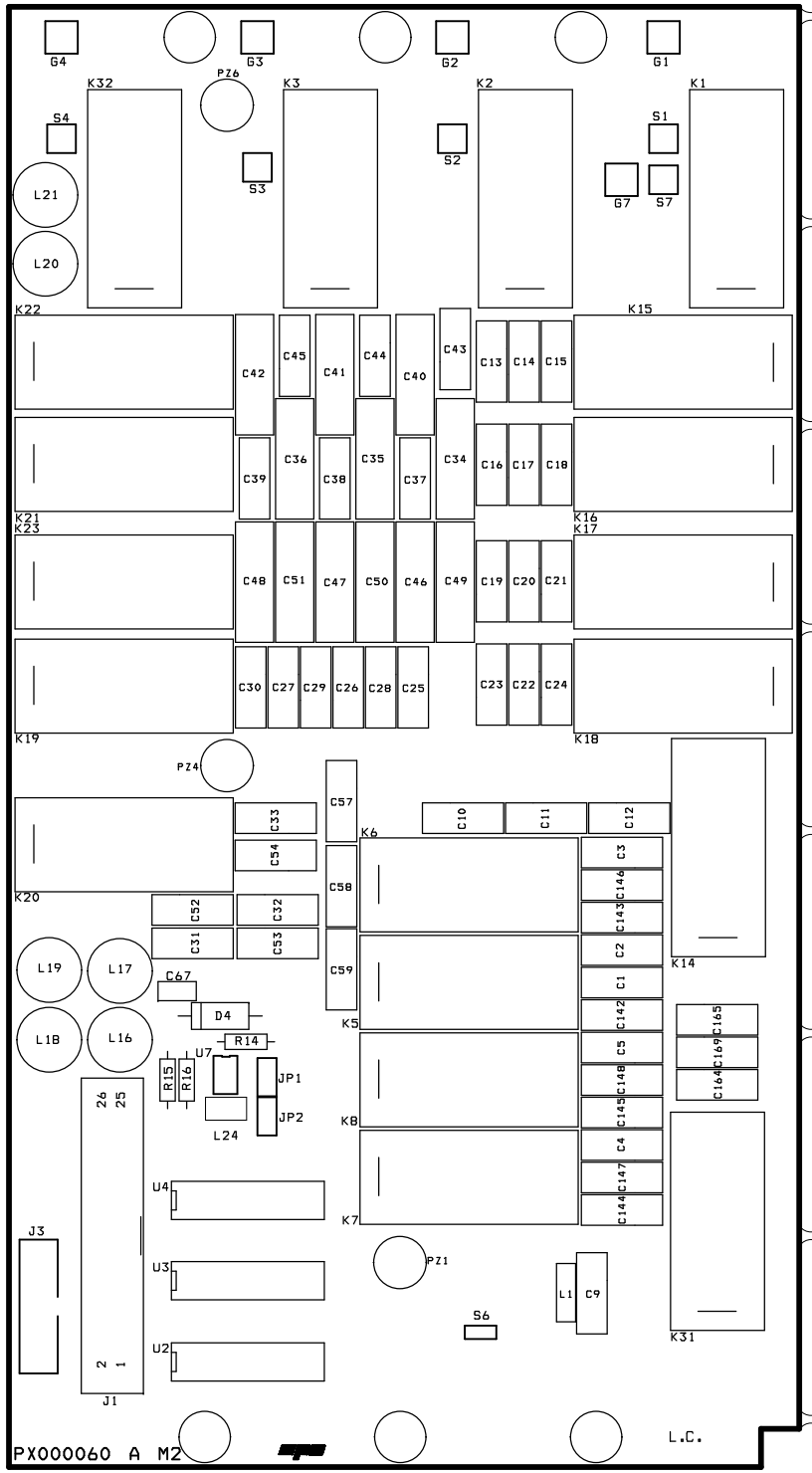

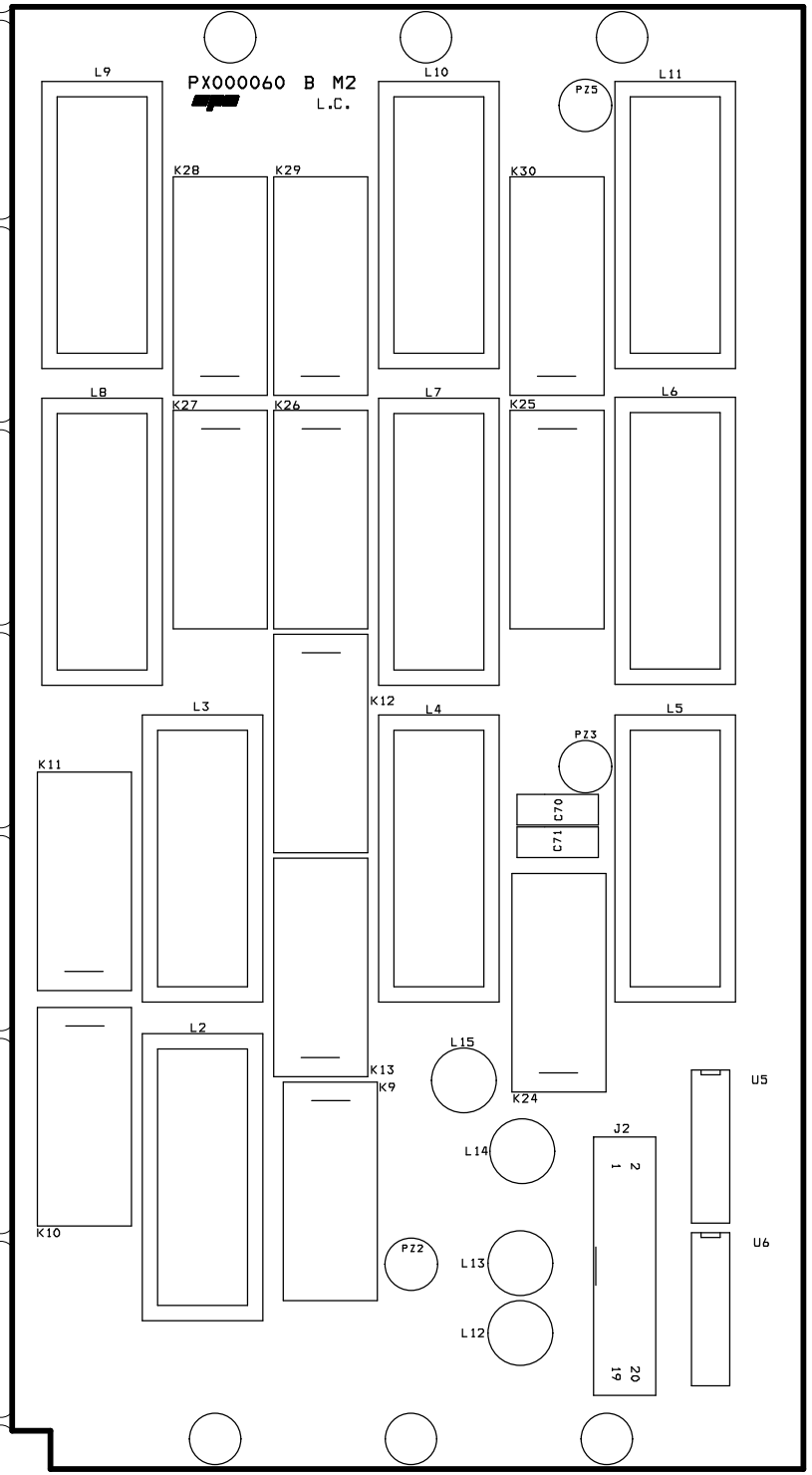

AZ000010 M0 EXPERT 1K-FA LINEAR AMPLIFIER
AUTOMATIC TUNER BOARD
Cod. Doc.: DMP-PE000060 MC
Drawn: DIVISI CRISTIANO
Verified: UTIMPERGHER LUCIANO
Date: 2007/03/26
Pag. 2 di 2

PX000060 B M2
L.S.

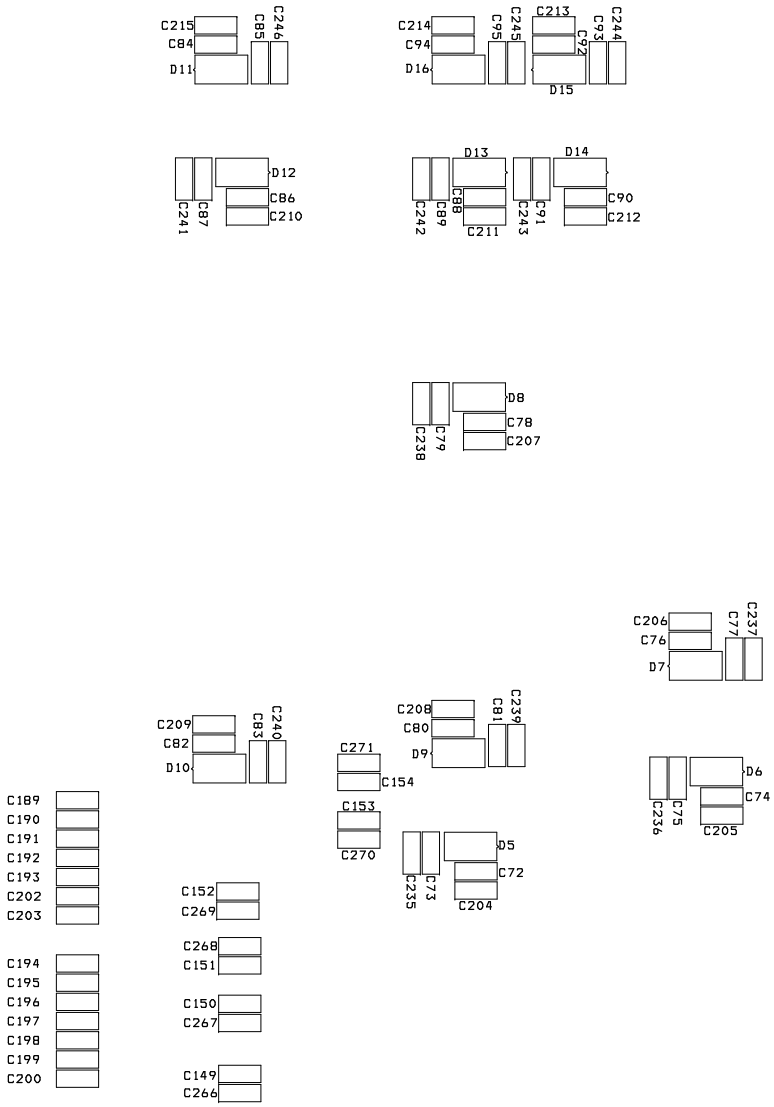

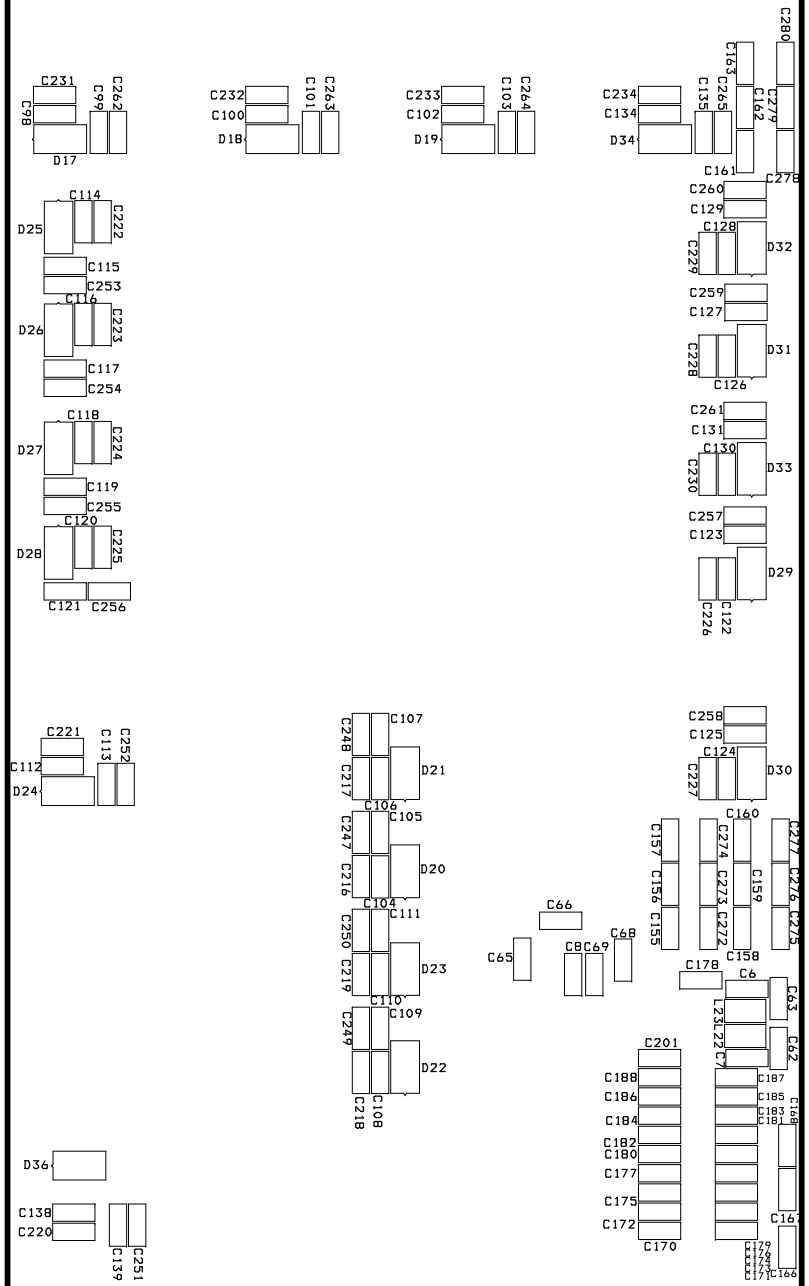

L.S.

PX000060 A M2

SOCIETÁ PER L'ELETTRONICA s.r.l.

220VAC BOARD

DMP-PE000065 MC

PCB BOARD VIEW

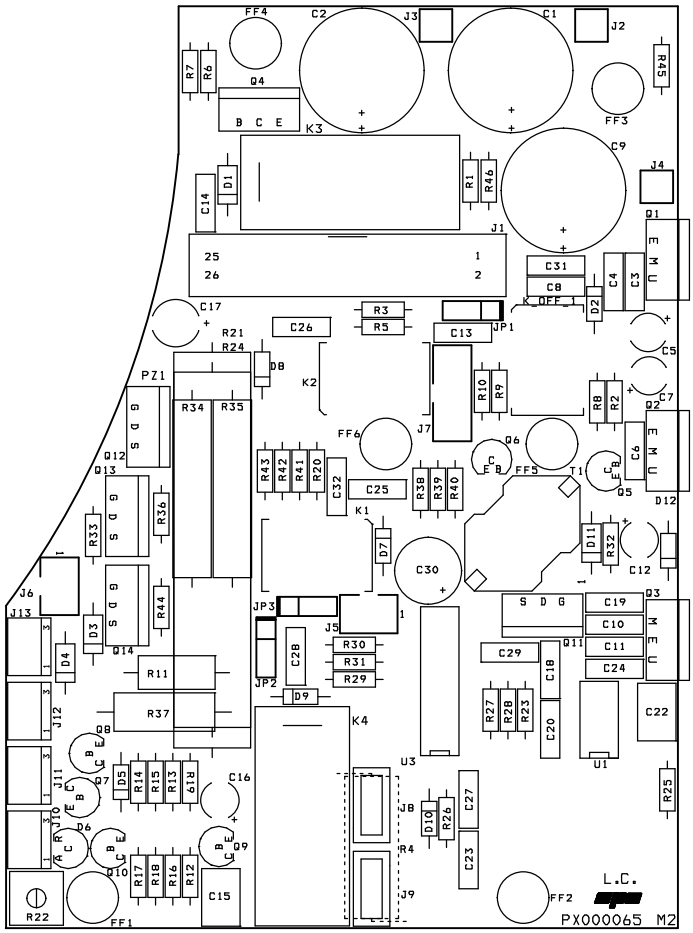

AZ000010 M0 EXPERT 1K-FA LINEAR AMPLIFIER
220VAC BOARD
Cod. Doc.: DMP-PE000065 MC
Drawn: DIVISI CRISTIANO
Verified: UTIMPERGHER LUCIANO
Date: 2007/03/27
Pag. 1 di 1

SOCIETÁ PER L'ELETTRONICA s.r.l.

48VDC BOARD

DMP-PE000064 MB

PCB BOARD VIEW

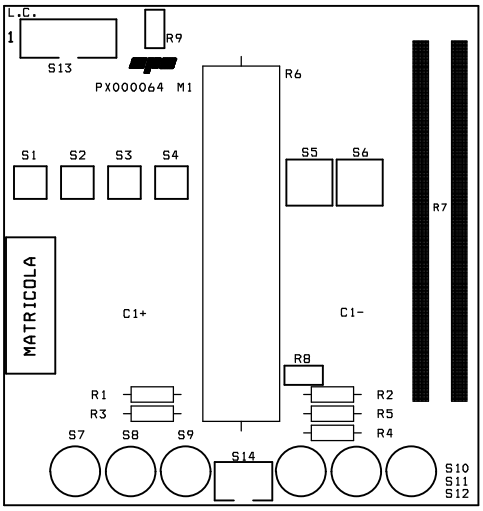

AZ000010 MO EXPERT 1K-FA LINEAR AMPLIFIER
48VDC BOARD
Cod. Doc.: DMP-PE000064 MB
Drawn: DIVISI CRISTIANO
Verified: UTIMPERGHER LUCIANO
DatE: 2007/03/14
Pag. 1 di 1

SOCIETÁ PER L'ELETTRONICA s.r.l.

SCR BOARD

DMP-PE000067 MB

PCB BOARD VIEW

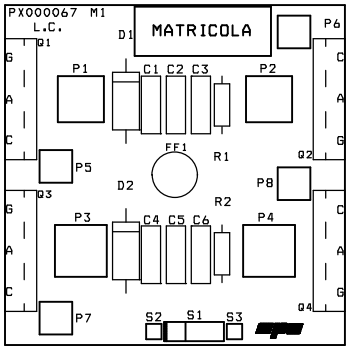

AZ000010 M0 EXPERT 1K-FA LINEAR AMPLIFIER
SCR BOARD
Cod. Doc.: DMP-PE000067 MB
Drawn: DIVISI CRISTIANO
Verified: UTIMPERGHER LUCIANO
Date: 2007/03/14
Pag. 1 di 1

SOCIETÁ PER L'ELETTRONICA s.r.l.

CHANGE VOLTAGE BOARD

DMP-PE000068 MB

PCB BOARD VIEW

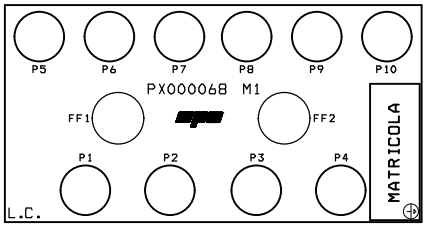

AZ000010 M0 EXPERT 1K-FA LINEAR AMPLIFIER
CHANGE VOLTAGE BOARD
Cod. Doc.: DMP-PE000068 MB
Drawn: DIVISI CRISTIANO
Verified: UTIMPERGHER LUCIANO
Date: 2007/03/14
Pag. 1 di 1

SOCIETÁ PER L'ELETTRONICA s.r.l.

CPU BOARD

CPO-PE000066 MD

PART LIST

AZ000010 M0 SPE EXPERT 1K-FA LINEAR AMPLIFIER
CPO-PE000066 MD CPU BOARD

Date: Monday 4 June 2007
Rev.: D

Società Per l'Elettronica s.r.l.
Via Di Monteverde, 33
00152 Roma - Italy

Develops : SSP Divisi Cristiano
Verified : RSH Utimpergher Luciano

Item	Qty	Reference	Part	Type	%	W	VDC	COD SPE	PACKAGE	NOTE
1	1	BZ1	PKM17EPP-4001					CJ111003	BUZZER	BUZZER
2	5	C1,C2,C3,C65,C125	10uF	ELE			16V	CC119002	NACE4	
3	2	C4,C5	22pF	CER	5%		50V	CC232004	0805	
4	11	C6,C7,C8,C9,C10,C21,C94, C118,C119,C120,C121	1uF	CER	20%		25V	CC223001	1206	
5	62	C11,C12,C13,C14,C15,C16, C17,C18,C19,C20,C22,C23, C24,C25,C28,C29,C30,C31, C36,C37,C40,C41,C42,C43, C44,C45,C49,C54,C61,C64, C66,C69,C70,C71,C72,C73, C79,C80,C83,C85,C86,C87, C88,C89,C90,C91,C97,C98, C102,C103,C104,C105,C106, C107,C122,C123,C124,C127, C128,C137,C138,C139	100nF	CER	20%		50V	CC233001	1206	
6	5	C26,C27,C75,C92,C93	1nF	CER	10%		50V	CC233011	1206	
7	7	C32,C33,C34,C35,C38,C39, C96	470pF	CER	5%		50V	CC232012	0805	
8	30	C46,C47,C50,C51,C52,C55, C56,C57,C59,C60,C74,C76, C77,C81,C84,C99,C100, C101,C108,C109,C110,C111, C112,C113,C114,C115,C133, C134,C135,C136	10nF	CER	10%		63V	CC233016	1206	
9	1	C48	Don't mount		10%				0805	Don't mount
10	1	C53	4.7nF	CER	10%		50V	CC232014	0805	
11	3	C58,C62,C131	470nF	CER	20%		50V	CC233005	1206	
12	1	C63	100uF	ELE			16V	CC119001	NACE6.3	
13	2	C68,C67	C		10%				1206	Don't mount
14	1	C78	2.2nF	CER	10%		50V	CC233007	1206	

AZ000010 M0 SPE EXPERT 1K-FA LINEAR AMPLIFIER
CPO-PE000066 MD CPU BOARD

Date: Monday 4 June 2007
Rev.: D

Società Per l'Elettronica s.r.l.
Via Di Monteverde, 33
00152 Roma - Italy

Develops : SSP Divisi Cristiano
Verified : RSH Utimpergher Luciano

Item	Qty	Reference	Part	Type	%	W	VDC	COD SPE	PACKAGE	NOTE
15	1	C82	C						CE200	Don't mount
16	1	C117	47uF	ELE			16V	CC129001	NACE6.3	
17	1	C129	C	CER	10%		50V		1206	Don't mount
18	1	C130	4.7uF	CER	20%		16V	CC213003	1206	
19	1	C132	10pF	CER	5%		50V	CC232003	0805	
20	42	C140,C141,C142,C143,C144, C145,C146,C147,C148,C149, C150,C151,C152,C153,C154, C155,C158,C159,C160,C161, C162,C163,C164,C165,C166, C167,C168,C169,C170,C171, C172,C173,C174,C175,C176, C177,C178,C179,C180,C181, C182,C183	100nF	CER	20%		50V	CC233001	0805	
21	2	C156,C157	C						0805	Don't mount
22	2	D1,D4	YELLOW LED					CO121002	LED 3mm	
23	2	D2,D6	RED LED					CO111003	LED 3mm	
24	2	D3,D5	GREEN LED					CO131003	LED 3mm	
25	39	D7,D8,D9,D10,D11,D14,D17, D18,D19,D20,D21,D22,D23, D24,D25,D26,D27,D29,D30, D31,D32,D36,D37,D38,D39, D40,D41,D42,D43,D44,D45, D46,D48,D49,D51,D57,D67, D68,D70	LL4148					CH119001	MINIMELF	
26	6	D15,D28,D33,D60,D62,D63	TZMC5V1			0.5W		CH559003	MINIMELF	
27	1	D16	Don't mount						MINIMELF	Don't mount
28	3	D34,D47,D69	R						MINIMELF	Don't mount
29	1	D35	LM336-5.0V					CH912001	TO92/50/RCA	
30	1	D50	ZMMC3V3			0.5W		CH559010	MINIMELF	
31	5	D52,D53,D56,D58,D59	1N34					CH911004	D450	

AZ000010 M0 SPE EXPERT 1K-FA LINEAR AMPLIFIER
CPO-PE000066 MD CPU BOARD

Date: Monday 4 June 2007
Rev.: D

Società Per l'Elettronica s.r.l.
Via Di Monteverde, 33
00152 Roma - Italy

Develops : SSP Divisi Cristiano
Verified : RSH Utimpergher Luciano

Item	Qty	Reference	Part	Type	%	W	VDC	COD SPE	PACKAGE	NOTE
32	2	D55,D54	ZPD6V2			0.5W		CH551016	DO35	
33	3	FAN1,FAN2,FAN3	CONN-FAN/3X1					FP000173	CONN-FAN/3X1	
34	4	FF1,FF2,FF3,FF4	HOLE3.3/PAD					ON P.B.	HOLE3.3/PAD	
35	5	JP1,JP6,JP7,JP8,JP9	JUMPER3\1-2					ON P.B.	PAD	
36	1	JP4	JUMPER CC					ON P.B.	PAD	
37	1	J1	FLAT10P					FP000105	FLAT10PM	
38	1	J2	PADS					ON P.B.	PAD	
39	2	J5,J3	FLAT26P					FP000071	FLAT26P	
40	2	J13,J4	FLAT16					FP000166	FLAT16P	
41	1	J6	AMP2					FP000006	AMP2	
42	2	J11,J7	FLAT20P					FP000075	FLAT20P	
43	2	J9,J8	AMP4					FP000011	AMP4	
44	1	J10	AMP6					FP000010	AMP6	
45	1	J12	ZIFLEX13					FP000172	ZIFLEX13X1	
46	1	Q1	BSS129					CS412001	T092	
47	12	Q6,Q7,Q8,Q9,Q11,Q12,Q13, Q14,Q15,Q16,Q17,Q18	BC547					CS112001	TO92	
48	1	Q10	BC307					CS212002	TO92	
49	1	R1	20K					CR741003	TRIMMER	
50	2	R191,R2	470		5%	0.1W		CR912071	0805	
51	1	R3	2K7		5%	0.1W		CR912093	0805	
52	13	R4,R12,R13,R14,R29,R32, R34,R51,R85,R88,R89,R92, R128	1K		5%	0.1W		CR912003	0805	
53	21	R5,R6,R7,R8,R9,R10,R11, R15,R18,R19,R27,R47,R93, R106,R115,R121,R125,R126, R129,R137,R195	10K		5%	0.1W		CR912001	0805	
54	18	R16,R22,R150,R178,R190, R194,R207,R208,R209,R210, R211,R212,R213,R214,R215,	100		5%	0.1W		CR912006	0805	

AZ000010 M0 SPE EXPERT 1K-FA LINEAR AMPLIFIER
CPO-PE000066 MD CPU BOARD

Date: Monday 4 June 2007
Rev.: D

Società Per l'Elettronica s.r.l.
Via Di Monteverde, 33
00152 Roma - Italy

Develops : SSP Divisi Cristiano
Verified : RSH Utimpergher Luciano

Item	Qty	Reference	Part	Type	%	W	VDC	COD SPE	PACKAGE	NOTE
		R216,R217,R218								
55	5	R17,R80,R116,R117,R139	2K2		1%	0.1W		CR922023	0805	
56	1	R20	820		5%	0.1W		CR912076	0805	
57	14	R21,R25,R31,R33,R64,R66, R96,R103,R104,R133,R134, R138,R182,R186	4K7		1%	0.1W		CR922083	0805	
58	2	R52,R23	1K8		1%	0.1W		CR922045	0805	
59	1	R24	12K		5%	0.1W		CR912005	0805	
60	1	R26	150K		5%	0.1W		CR922017	0805	
61	2	R135,R35	56.2		1%	0.1W		CR922166	0805	
62	5	R36,R37,R38,R39,R65	560		5%	0.1W		CR912100	0805	
63	4	R41,R98,R123,R196	0		5%	0.1W		CR912080	0805	
64	1	R42	R_TAR		5%	0.1W			J\2P\0805	
65	4	R43,R55,R60,R109	15K		1%	0.1W		CR922012	0805	
66	1	R44	22K		1%	0.1W		CR922005	0805	
67	1	R45	90K9		1%	0.1W		CR922142	0805	
68	3	R46,R91,R107	2M2		5%	0.1W		CR912067	0805	
69	2	R68,R49	3K57		1%	0.1W		CR922131	0805	
70	3	R50,R63,R78	220K		5%	0.1W		CR912048	0805	
71	3	R53,R54,R72	2K15		1%	0.1W		CR922184	0805	
72	4	R56,R57,R58,R59	1K		1%	0.1W		CR922066	0805	
73	1	R61	2K87		1%	0.1W		CR922169	J\2P\0805	
74	2	R136,R62	1K05		1%	0.1W		CR922022	0805	
75	1	R67	29K4		1%	0.1W		CR922198	J\2P\0805	
76	1	R69	R_TAR						J\2P\0805	Don't mount
77	1	R70	1K69		1%	0.1W		CR922112	0805	
78	1	R71	4K7		1%	0.1W		CR922083	J\2P\0805	
79	2	R73,R127	470K		5%	0.1W		CR912014	0805	
80	2	R74,R75	100K		1%	0.1W		CR922093	0805	
81	4	R76,R77,R79,R119	1M		1%	0.1W		CR922016	0805	
82	2	R90,R81	6K8		5%	0.1W		CR912029	0805	

AZ000010 M0 SPE EXPERT 1K-FA LINEAR AMPLIFIER
CPO-PE000066 MD CPU BOARD

Date: Monday 4 June 2007
Rev.: D

Società Per l'Elettronica s.r.l.
Via Di Monteverde, 33
00152 Roma - Italy

Develops : SSP Divisi Cristiano
Verified : RSH Utimpergher Luciano

Item	Qty	Reference	Part	Type	%	W	VDC	COD SPE	PACKAGE	NOTE
83	1	R82	1K27		1%	0.1W		CR922106	0805	
84	1	R83	3K3		1%	0.1W		CR922024	0805	
85	1	R84	6K65		1%	0.1W		CR922197	0805	
86	4	R87,R197,R198,R199	100K		5%	0.1W		CR912012	0805	
87	1	R94	1K2		5%	0.1W		CR912064	0805	
88	1	R95	17K8		1%	0.1W		CR922114	0805	
89	19	R97,R99,R100,R101,R102, R114,R120,R151,R152,R153, R154,R155,R200,R201,R202, R203,R204,R205,R206	R						0805	Don't mount
90	1	R105	47K		5%	0.1W		CR9122055	0805	
91	13	R108,R166,R167,R168,R169, R170,R171,R172,R173,R174, R175,R176,R177	3K9		5%	0.1W		CR912028	0805	
92	2	R110,R111	10K		1%	0.1W		CR922028	0805	
93	2	R149,R113	180		5%	1W		CR411010	R650	
94	1	R118	180K		5%	0.1W		CR912013	0805	
95	1	R122	9M09		1%	0.1W		CR922121	0805	
96	1	R124	20K5		1%	0.1W		CR922105	0805	
97	1	R132	2K87		1%	0.1W		CR922169	0805	
98	1	R179	2K49		1%	0.1W		CR922073	0805	
99	1	R180	5K			0.5W		CR741007	TRIMMER	1 TURN
100	1	R183	R_TAR		5%	0.1W			J\2P\0805	(226K)
101	1	R189	82		1%	0.1W		CR922132	0805	
102	2	R193,R192	180		5%	0.25W		CR211075	R400	
103	2	TP1,TP2	PAD					ON P.B.	PAD	
104	2	U1,U4	74HCT373N					CD161006	DIP20	
105	1	U2	80C196KB					CP232001	PLCC68	On socket
106	1	U3	74HCT08N					CD111035	DIP14	
107	1	U5	M74HCT245B1					CD121005	DIP20	
108	3	U6,U47,U48	NM93C86A					CM394006	SOIC8-150	

AZ000010 M0 SPE EXPERT 1K-FA LINEAR AMPLIFIER
CPO-PE000066 MD CPU BOARD

Date: Monday 4 June 2007
Rev.: D

Società Per l'Elettronica s.r.l.
Via Di Monteverde, 33
00152 Roma - Italy

Develops : SSP Divisi Cristiano
Verified : RSH Utimpergher Luciano

Item	Qty	Reference	Part	Type	%	W	VDC	COD SPE	PACKAGE	NOTE
109	1	U7	CD74HCT138E					CD131004	DIP16-300	
110	1	U8	CD74HCT27E					CD111023	DIP14-300	
111	1	U9	SN74HCT139					CD131010	DIP16-300	
112	2	U10,U39	MAX232CPE					CA532004	DIP16-300	
113	1	U11	AM29F010-70PC					CM431003	DIP32-600	On socket
114	1	U12	HM62256LP-12					CM121002	DIP28-600	
115	3	U13,U19,U36	DG201ACJ					CA492001	DIP16-300	
116	2	U38,U14	74HC86					CD114006	SOIC14-150	
117	1	U15	AT89C51					CP122001	PLCC44	On socket
118	1	U16	UA741					CA112015	DIP8-300	
119	7	U17,U20,U22,U24,U26,U27, U42	SN74HCT374N					CD141007	DIP20-300	
120	1	U18	CD74HCT238E					CD131011	DIP16-300	
121	1	U21	U						DIP8-300	Don't mount
122	5	U28,U29,U30,U31,U32	TL084					CA112013	DIP14-300	
123	1	U33	U						DIP16-300	Don't mount
124	1	U34	MC74HCT04AN					CD111010	DIP14	
125	1	U35	74HCT390P					CD151001	DIP16	
126	1	U37	NE592N					CA152001	DIP14	
127	1	U40	KA555					CA692010	DIP8-300	
128	1	U43	MCP42010					CR742001	SOIC14-150	
129	1	U44	4N35					CO691002	DIP6-300	
130	1	U46	ULN2004AN					CD921005	DIP16-300	
131	1	Y1	11.0592MHz					CQ111027	HC49/U	
132	1	U2	PLCC68 SOCKET					FK000002	PLCC68	For U2
133	1	U11	DIP32-600 SOCKET					FK000027	DIP32-600	For U11
134	1	U15	PLCC44 SOCKET					FK000025	PLCC44	For U15
135	1		PRINTED BOARD					PX000066M3		
136	1		LABEL					ZE000019		SERIAL NUMBER

SOCIETÁ PER L'ELETTRONICA s.r.l.

AMPLIFIER BOARD

CPO-PE000061 MD

PART LIST

AZ000010 M0 SPE EXPERT 1K-FA LINEAR AMPLIFIER
CPO-PE000061 MD AMPLIFIER BOARD

Date: Tuesday 24 April 2007
Rev.: D

Società Per l'Elettronica s.r.l.
Via Di Monteverde, 33
00152 Roma - Italy

Develops : SSP Divisi Cristiano
Verified : RSH Utimpergher Luciano

Item	Qty	Reference	Part	Type	%	W	VDC	COD SPE	PACKAGE	NOTE
1	28	C1,C12,C14,C16,C35,C39, C45,C51,C66,C69,C71,C72, C73,C74,C94,C125,C131, C132,C133,C134,C135,C136, C137,C138,C139,C140,C141, C142	100nF	POL	5%		63V	CC431010	C200	
2	2	C36,C2	1uF	CER	5%		50V	CC231037	C200	
3	3	C3,C120,C121	1nF	CER	5%		63V	CC231028	C100	
4	6	C5,C6,C7,C8,C9,C10	560pF	CER	5%		100V	CC241012	C200	
5	33	C11,C13,C15,C23,C24,C25, C26,C27,C28,C40,C46,C52, C67,C68,C70,C84,C85,C86, C87,C88,C89,C90,C91,C92, C93,C117,C119,C124,C126, C127,C128,C129,C130	10nF	POL	5%		100V	CC441020	C200	
6	18	C17,C18,C19,C20,C21,C22, C29,C30,C31,C32,C33,C34, C42,C43,C48,C49,C54,C55	47nF	POL	10%		63V	CC431007	C200	
7	3	C56,C57,C61	27pF	MICA	+-0.5PF		500V	CC651024	DM10	
8	3	C58,C59,C60	22pF	MICA	+-0.5PF		500V	CC651002	DM10	
9	1	C62	15pF	MICA	+-0.5PF		500V	CC651019	DM10	Don't mount
10	3	C97,C98,C99	100pF	MICA	1%		500V	CC651007	DM10	
11	3	C106,C107,C108	150pF	MICA	1%		500V	CC651008	DM10	
12	3	C109,C110,C111	82pF	MICA	1%		500V	CC651006	DM10	
13	2	C114,C112	10pF	MICA	+-0.5PF		500V	DM10	C225	
14	2	C113,C115	9.8/68pF	CER			100V	CC541002	TRIMMER	
15	2	C118,C116	220pF	POL	2.5%		100V	CC441002	C200	
16	1	C122	47uF	ELE	20%		25V	CC121020	CE200	Doun't mount
17	1	C123	100nF	POL	5%		63V	CC431010	C200	Doun't mount
18	3	D1,D2,D3	1N4148					CH111001	DO35	
19	5	D4,D5,D6,D10,D11	1N4007					CH311001	DO41	

AZ000010 M0 SPE EXPERT 1K-FA LINEAR AMPLIFIER
CPO-PE000061 MD AMPLIFIER BOARD

Date: Tuesday 24 April 2007
Rev.: D

Società Per l'Elettronica s.r.l.
Via Di Monteverde, 33
00152 Roma - Italy

Develops : SSP Divisi Cristiano
Verified : RSH Utimpergher Luciano

Item	Qty	Reference	Part	Type	%	W	VDC	COD SPE	PACKAGE	NOTE
20	2	D7,D8	1N34					CH911004	D550	
21	1	D9	BZX55C7V5					CH551032	DO35	Doun't mount
22	3	FB1,FB2,FB3	RF BLOCK					CF600063	TR-LIN-01/03	
23	4	FF1,FF2,FF3,FF4	HOLE3.3/PAD					ON P.B	HOLE3.3/PAD	
24	18	G1,G-J1,G2,G-J2,G3,G-J4, S5,G5,G-J5,S6,G6,G-J6,S7, G7,G-J7,G-J8,G9,G-J9	PAD					ON P.B	PAD	
25	2	G4,G8	PAD					ON P.B.	PAD	
26	6	JP1,JP2,JP3,JP4,JP5,JP6	JUMPER2					FP000022	JUMPER2	
27	2	JP7,JP8	JUMPER CC					ON P.B.	PAD	
28	1	JP9	JUMPER2					ON P.B.	PAD	
29	1	J1	AMP2					FP000006	AMP2	
30	2	J4,J2	AMP6					FP000010	AMP6	
31	1	J3	AMP4					FP000011	AMP4V	
32	5	K1,K2,K3,K4,K5	M25-A001012					CI131003	RELAY_MS25	
33	5	L1,L2,L3,L4,L6	AL0307-3R3K					CF600003	L400	
34	1	L5	L-SWR					CF600062	TR-FB77/2	
35	1	Q1	LM35-DZ					CW911022	TO92	
36	6	Q2,Q3,Q4,Q5,Q6,Q7	MRF150					CS349001	CASE211	
37	3	Q8,Q9,Q10	BC639					CS112002	TO92	
38	1	Q11	LM35-DZ					CW911022	TO92	
39	2	R27,R1	75		1%	0.25W		CR221068	R400	
40	1	R2	10		1%	0.25W		CR221022	R400	
41	1	R3	866		1%	0.25W		CR221128	R400	
42	1	R4	2K		1%	0.25W		CR221147	R400	
43	1	R5	3K48		1%	0.25W		CR221060	R400	
44	1	R6	953		1%	0.25W		CR221130	R400	
45	1	R7	10K		1%	0.25W		CR221002	R400	
46	1	R8	THERMISTOR NTC 10K					CW911023	THERMISTOR	
47	24	R9,R10,R11,R12,R13,R14, R21,R22,R23,R24,R25,R26,	10		1%	1W		CR411057	R400	

AZ000010 M0 SPE EXPERT 1K-FA LINEAR AMPLIFIER
CPO-PE000061 MD AMPLIFIER BOARD

Date: Tuesday 24 April 2007
Rev.: D

Società Per l'Elettronica s.r.l.
Via Di Monteverde, 33
00152 Roma - Italy

Develops : SSP Divisi Cristiano
Verified : RSH Utimpergher Luciano

Item	Qty	Reference	Part	Type	%	W	VDC	COD SPE	PACKAGE	NOTE
		R71,R72,R73,R74,R75,R76, R77,R78,R79,R80,R81,R82								
48	8	R15,R16,R17,R18,R19,R20, R64,R66	5K			0.5W		CR741007	TRIMMER	1 TURN
49	6	R33,R34,R35,R36,R37,R38	4K7		1%	0.25W		CR221168	R400	
50	6	R39,R40,R41,R42,R43,R44	56		5%	6W		CR411054	R1100	
51	3	R45,R46,R47	22		5%	3W		CR411053	R800	
52	1	R51	47		5%	2W		CR411049	R800	
53	2	R52,R54	10K		5%	0.25W		CR211005	R400	
54	3	R53,R55,R70	2K		5%	0.25W		CR211032	R400	
55	4	R56,R57,R58,R59	68		5%	0.5W		CR311040	R450	
56	2	R61,R60	1K87		1%	0.25W		CR221145	R400	
57	2	R63,R62	30K1		1%	0.25W		CR221215	R400	
58	2	R67,R65	10K5		1%	0.25W		CR221191	R400	
59	1	R68	820		1%	0.25W		CR221126	R400	Doun't mount
60	16	S1,S-J1,S2,S-J2,S3,S-J4, S-J5,S-J6,S-J7,S-J8,S9, S-J9,TR1-J1,TR2-J1, TR2-J2,TR3-J2	PAD					ON P.B.	PAD	
61	2	S8,S4	PAD					SU C.S.	PAD	
62	1	S10	PAD					SU C.S.	PAD	
63	9	TP1,TP2,TP3,TP4,TP5,TP6, TP7,TP8,TP9	PAD					SU CS	PAD	
64	3	TR1,TR2,TR3	TR-LIN-01					BT000041	TR-LIN-01/13	
65	3	TR4,TR5,TR6	TR-LIN-04					BT000042	TR-LIN-04	
66	1	TR7	TR-LIN-07					BT000046	TR-LIN-07	
67	1	TR8	TR-LIN-06					BT000044	TR-LIN-06/04	
68	1	TR11	TRF_FB77					BT000045	TR-FB77	
69	1	U1	MC1723CP					CB491004	DIP16-300	
70	1	U2	TLV272CD					CA243001	SOIC8-150	Doun't mount
71	6	JP1,JP2,JP3,JP4,JP5,JP6	JUMPER F					FS000001	FEMALE JUMPER	

AZ000010 M0 SPE EXPERT 1K-FA LINEAR AMPLIFIER
CPO-PE000061 MD AMPLIFIER BOARD

Date: Tuesday 24 April 2007
Rev.: D

Società Per l'Elettronica s.r.l.
Via Di Monteverde, 33
00152 Roma - Italy

Develops : SSP Divisi Cristiano
Verified : RSH Utimpergher Luciano

Item	Qty	Reference	Part	Type	%	W	VDC	COD SPE	PACKAGE	NOTE
72	1		PRINTED BOARD					PX000061 M3		
73	1		LABEL					ZE000019		SERIAL NUMBER

SOCIETÁ PER L'ELETTRONICA s.r.l.

AUTOMATIC TUNER BOARD

CPO-PE000060 MC

PART LIST

AZ000010 M0 SPE EXPERT 1K-FA LINEAR AMPLIFIER
CPO-PE000060 MC TUNER BOARD

Date: Monday 18 June 2007
Rev.: C

Società Per l'Elettronica s.r.l.
Via Di Monteverde, 33
00152 Roma - Italy

Develops : SSP Divisi Cristiano
Verified : RSH Utimpergher Luciano

Item	Qty	Reference	Part	Type	%	W	VDC	COD SPE	PACKAGE	NOTE
1	1	C1	C	MICA	1%		500V		DM15	Don't mount
2	2	C142,C2	330pF	MICA	1%		500V	CC651012	DM15	
3	7	C3,C25,C26,C27,C28,C29,C30	120pF	MICA	1%		500V	CC651021	DM10L	
4	3	C4,C9,C144	39pF	MICA	+-0.5PF		500V	CC651003	DM10L	
5	4	C5,C70,C71,C145	22pF	MICA	+-0.5PF		500V	CC651002	DM10L	
6	6	C6,C7,C62,C63,C138,C139	10nF	CER	20%		63V	CC233016	1206	Don't mount
7	112	C8,C69,C72,C73,C74,C75,C76,C77,C78,C79,C80,C81,C82,C83,C84,C85,C86,C87,C88,C89,C90,C91,C92,C93,C94,C95,C98,C99,C100,C101,C102,C103,C104,C105,C106,C107,C108,C109,C110,C111,C112,C113,C114,C115,C116,C117,C118,C119,C120,C121,C122,C123,C124,C125,C126,C127,C128,C129,C130,C131,C134,C135,C149,C150,C151,C152,C153,C154,C155,C156,C157,C158,C159,C160,C161,C162,C163,C166,C167,C168,C170,C171,C172,C173,C174,C175,C176,C177,C178,C179,C180,C181,C182,C183,C184,C185,C186,C187,C188,C189,C190,C191,C192,C193,C194,C195,C196,C197,C198,C199,C200,C201	10nF	CER	20%		63V	CC233016	1206	
8	6	C10,C11,C12,C57,C58,C59	7,5pF	MICA	+-0.5PF		500V	CC651029	DM10L	

AZ000010 M0 SPE EXPERT 1K-FA LINEAR AMPLIFIER
CPO-PE000060 MC TUNER BOARD

Date: Monday 18 June 2007
Rev.: C

Società Per l'Elettronica s.r.l.
Via Di Monteverde, 33
00152 Roma - Italy

Develops : SSP Divisi Cristiano
Verified : RSH Utimpergher Luciano

Item	Qty	Reference	Part	Type	%	W	VDC	COD SPE	PACKAGE	NOTE
9	3	C13,C14,C15	15pF	MICA	+-0.5PF		500V	CC651019	DM10L	
10	3	C16,C17,C18	33pF	MICA	+-0.5PF		500V	CC651020	DM10L	
11	9	C19,C20,C21,C22,C23,C24, C281,C282,C283	62pF	MICA	1%		500V	CC651025	DM10L	
12	6	C31,C32,C33,C52,C53,C54	240pF	MICA	1%		500V	CC651026	DM10L	
13	3	C34,C35,C36	680pF	MICA	1%		500V	CC651014	DM19	
14	3	C37,C38,C39	270pF	MICA	1%		500V	CC651011	DM15	
15	3	C40,C41,C42	1000pF	MICA	1%		500V	CC651027	DM19	
16	3	C43,C44,C45	910pF	MICA	1%		500V	CC651028	DM19	
17	3	C46,C47,C48	2200pF	MICA	1%		500V	CC651016	DM19	
18	3	C49,C50,C51	1500pF	MICA	1%		500V	CC651022	DM19	
19	76	C65,C204,C205,C206,C207, C208,C209,C210,C211,C212, C213,C214,C215,C216,C217, C218,C219,C221,C222,C223, C224,C225,C226,C227,C228, C229,C230,C231,C232,C233, C234,C235,C236,C237,C238, C239,C240,C241,C242,C243, C244,C245,C246,C247,C248, C249,C250,C252,C253,C254, C255,C256,C257,C258,C259, C260,C261,C262,C263,C264, C265,C266,C267,C268,C269, C270,C271,C272,C273,C274, C275,C276,C277,C278,C279, C280	100nF	CER	20%		50V	CC233001	1206	
20	1	C66	220pF	CER	5%		50V	CC233030	1206	
21	1	C67	1nF	CER	5%		63V	CC231028	C100	
22	1	C68	10nF	CER	10%		63V	CC233016	1206	
23	1	C143	150pF	MICA	1%		500V	CC651008	DM10L	

AZ000010 M0 SPE EXPERT 1K-FA LINEAR AMPLIFIER
CPO-PE000060 MC TUNER BOARD

Date: Monday 18 June 2007
Rev.: C

Società Per l'Elettronica s.r.l.
Via Di Monteverde, 33
00152 Roma - Italy

Develops : SSP Divisi Cristiano
Verified : RSH Utimpergher Luciano

Item	Qty	Reference	Part	Type	%	W	VDC	COD SPE	PACKAGE	NOTE
24	1	C146	C	MICA	1%		500V		DM10L	Don't mount
25	5	C147,C148,C164,C165,C169	C	MICA	+-0.5PF		500V		DM10L	Don't mount
26	2	C203,C202	10nF	CER	20%		63V	CC233016	1206	Don't mount
27	2	C251,C220	100nF	CER	20%		50V	CC233001	1206	Don't mount
28	1	D4	1N34					CH911004	D550	
29	30	D5,D6,D7,D8,D9,D10,D11, D12,D13,D14,D15,D16,D17, D18,D19,D20,D21,D22,D23, D24,D25,D26,D27,D28,D29, D30,D31,D32,D33,D34	SM4007					CH119002	MELF	
30	1	D36	SM4007					CH119002	MELF	Don't mount
31	12	FF1,FF2,FF3,FF4,FF5,FF6, FF11,FF12,FF13,FF14,FF15, FF16	HOLE3.3/PAD					ON P.B.	HOLE3.3/PAD	
32	5	G1,G2,G3,G4,G7	PAD					ON P.B.	PAD	
33	2	JP1,JP2	JUMPER CC					ON P.B.	PAD	
34	1	J1	FLAT26P					FP000071	FLAT26P	
35	1	J2	FLAT20P					FP000075	FLAT20P	
36	1	J3	AMP6					FP000010	AMP6	
37	30	K1,K2,K3,K5,K6,K7,K8,K9, K10,K11,K12,K13,K14,K15, K16,K17,K18,K19,K20,K21, K22,K23,K24,K25,K26,K27, K28,K29,K30,K32	M25-A001012					CI131003	RELAY_MS25	
38	1	K31	M25-A001012					CI131003	RELAY_MS25	Don't mount
39	1	K31	M25-A001012					CI131003	RELAY_MS25	Don't mount
40	1	L1	35nH					CF600064	LINK	
41	1	L2	L2					CF600052	L01	
42	1	L3	L3					CF600053	L01	
43	1	L4	L4					CF600054	L01	
44	1	L5	L5					CF600055	L02	

AZ000010 M0 SPE EXPERT 1K-FA LINEAR AMPLIFIER
CPO-PE000060 MC TUNER BOARD

Date: Monday 18 June 2007
Rev.: C

Società Per l'Elettronica s.r.l.
Via Di Monteverde, 33
00152 Roma - Italy

Develops : SSP Divisi Cristiano
Verified : RSH Utimpergher Luciano

Item	Qty	Reference	Part	Type	%	W	VDC	COD SPE	PACKAGE	NOTE
45	1	L6	L6					CF600056	L02	
46	1	L7	L7					CF600057	L02	
47	1	L8	L8					CF600058	L02	
48	1	L9	L9					CF600059	L02	
49	1	L10	L10					CF600060	L02	
50	1	L11	L11					CF600061	L02	
51	5	L12,L14,L16,L18,L20	TSL0807-680KR91					CF600014	CYL/D.340	
52	5	L13,L15,L17,L19,L21	TSL0807-220K1RS					CF600002	CYL/D.340	
53	3	L22,L23,L24	NL322522T-470J					CF600037	1210	
54	6	PZ1,PZ2,PZ3,PZ4,PZ5,PZ6	PAD					ON P.B.	PAD	
55	1	R14	10K		1%	0.25W		CR221002	R400	
56	1	R15	71K5		1%	0.25W		CR221236	R400	
57	1	R16	40K2		1%	0.25W		CR221221	R400	
58	5	S1,S2,S3,S4,S7	PAD					ON P.B.	PAD	
59	1	S6	PADS					ON P.B.	PADS	
60	5	U2,U3,U4,U5,U6	ULN2004AN					CD921005	DIP16-300	
61	1	U7	TLC272CD					CA243001	SOIC8-150	
62	1		PRINTED BOARD					PX000060M2		
63	1		LABEL					ZE000019		Matricola

SOCIETÁ PER L'ELETTRONICA s.r.l.

220VAC BOARD

CPO-PE000065 MC

PART LIST

AZ000010 M0 SPE EXPERT 1K-FA LINEAR AMPLIFIER
CPO-PE000065 MC 220VAC BOARD

Date: Tuesday 20 March 2007
Rev.: C

Società Per l'Elettronica s.r.l.
Via Di Monteverde, 33
00152 Roma - Italy

Develops : SSP Divisi Cristiano
Verified : RSH Utimpergher Luciano

Item	Qty	Reference	Part	Type	%	W	VDC	COD SPE	PACKAGE	NOTE
1	3	C1,C2,C9	2200uF	ELE			25V	CC121019	CE300	
2	6	C3,C4,C6,C10,C11,C13	100nF	CER	20%		50V	CC231001	C200	
3	4	C5,C7,C12,C16	47uF	ELE	20%		25V	CC121020	CE200	
4	4	C8,C14,C31,C32	10nF	CER	20%		50V	CC231003	C200	
5	1	C15	1uF	POL	10%		63V	CC431020	C200	
6	1	C17	100uF	ELE	20%		25V	CC121021	CE200	
7	2	C20,C18	1nF	POL	10%		100V	CC441005	C200	
8	6	C19,C23,C24,C25,C26,C28	100nF	CER	20%		25V	CC221007	C200	
9	1	C22	470nF	POL	10%		63V	CC431015	C200	
10	1	C27	10nF	POL	5%		100V	CC441020	C200	
11	1	C29	4.7nF	POL	5%		100V	CC441013	C200	
12	1	C30	470uF	ELE			16V	CC111006	CE200	
13	4	D1,D3,D4,D11	1N4007					CH311001	DO41	
14	7	D2,D5,D7,D8,D9,D10,D12	1N4148					CH111001	DO35	
15	1	D6	LM336-2.5V/TO					CH912002	TO92/50/RCA	
16	6	FF1,FF2,FF3,FF4,FF5,FF6	PAD					ON P.B.	PAD	
17	2	JP1,JP3	JUMPER3					ON P.B.	PAD	DEFAULT 2-3
18	1	JP2	JUMPER3					ON P.B.	PAD	DEFAULT 1-2
19	1	J1	FLAT26					FP000071	FLAT26P	
20	3	J2,J3,J4	CON1					ON P.B.	PAD	
21	2	J5,J6	AMP2					FP000006	AMP2	
22	1	J7	AMP4					FP000011	AMP4	
23	2	J8,J9	CON2\FASTON					FK000079	FASTON CS	
24	4	J10,J11,J12,J13	CONN-FAN/3X1					FP000173	CONN-FAN/3X1	
25	1	K_OFF_1	TQ2-5V					CI111001	DIP10-300	
26	2	K2,K1	TQ2-12V					CI111004	DIP10-300	
27	1	K3	LCA 002					CI321003	RELAY_MS25	
28	1	K4	M25-A001012					CI131003	RELAY_MS25	
29	1	PZ1	PAD					ON P.B.	PAD	
30	1	Q1	LM7812					CB422001	TO220-MEU	
31	1	Q2	LM7805					CB412001	TO220-MEU	

AZ000010 M0 SPE EXPERT 1K-FA LINEAR AMPLIFIER
CPO-PE000065 MC 220VAC BOARD

Date: Tuesday 20 March 2007
Rev.: C

Società Per l'Elettronica s.r.l.
Via Di Monteverde, 33
00152 Roma - Italy

Develops : SSP Divisi Cristiano
Verified : RSH Utimpergher Luciano

Item	Qty	Reference	Part	Type	%	W	VDC	COD SPE	PACKAGE	NOTE
32	1	Q3	LM7912					CB422002	TO220-MEU	
33	1	Q4	BU806					CS112009	TO220	
34	2	Q5,Q6	BC639					CS112002	TO92	
35	3	Q7,Q8,Q10	BC547					CS112001	TO92	
36	1	Q9	BC307					CS212002	TO92	
37	4	Q11,Q12,Q13,Q14	IRF620					CS332003	TO220-GDS	
38	3	R1,R2,R10	1K		1%	0.25W		CR221013	R400	
39	2	R3,R17	1K8		5%	0.25W		CR211031	R400	
40	1	R4	3K9		5%	2W		CR411058	R800	
41	1	R5	470		1%	0.25W		CR221111	R400	
42	1	R6	560		1%	0.25W		CR221115	R400	
43	2	R7,R8	4K7		1%	0.25W		CR221168	R400	
44	1	R9	1K5		1%	0.25W		CR221140	R400	
45	1	R11	6K8		5%	1W		CR411018	R650	
46	2	R12,R15	2K		5%	0.25W		CR211032	R400	
47	1	R13	8K2		5%	0.25W		CR211042	R400	
48	1	R14	6K8		5%	0.25W		CR211038	R400	
49	1	R16	15		5%	0.25W		CR211013	R400	
50	2	R20,R18	4K7		5%	0.25W		CR211003	R400	
51	1	R19	18		5%	0.25W		CR211087	R400	
52	1	R21, R24	39		5%	15W		CR411056	R2250	
53	1	R22	5K					CR741007	TRIMMER	Don't mount
54	1	R23	75K		1%	0.25W		CR221237	R400	
55	1	R25	22K		5%	0.25W		CR211004	R400	
56	3	R26,R45,R46	1K5		5%	0.25W		CR211007	R400	
57	1	R27	33K		5%	0.25W		CR211052	R400	
58	1	R28	2K7		5%	0.25W		CR211035	R400	
59	3	R29,R30,R31	100		5%	0.25W		CR211014	R400	
60	1	R32	2R2		5%	0.25W		CR211036	R400	
61	3	R33,R36,R44	10K		1%	0.25W		CR221002	R400	
62	2	R35,R34	10		5%	3W		CR411020	R1100	

AZ000010 M0 SPE EXPERT 1K-FA LINEAR AMPLIFIER
CPO-PE000065 MC 220VAC BOARD

Date: Tuesday 20 March 2007
Rev.: C

Società Per l'Elettronica s.r.l.
Via Di Monteverde, 33
00152 Roma - Italy

Develops : SSP Divisi Cristiano
Verified : RSH Utimpergher Luciano

Item	Qty	Reference	Part	Type	%	W	VDC	COD SPE	PACKAGE	NOTE
63	1	R37	47		5%	2W		CR411049	R800	
64	2	R38,R42	48K7		1%	0.25W		CR221227	R400	
65	2	R39,R41	38K3		1%	0.25W		CR221219	R400	
66	1	R40	R_TAR		1%	0.25W		CR221240	R400	86K6
67	1	R43	R_TAR		1%	0.25W		CR221260	R400	205K
68	1	T1	)TAGE TRNSFORMER					BT000040	RM6	
69	1	U1	TL082					CA112014	DIP8-300	
70	1	U3	HEF4093BP					CD611027	DIP14-300	
71	1		PRINTED BOARD					PX000065 M2		
72	1		LABEL					ZE000019		

SOCIETÁ PER L'ELETTRONICA s.r.l.

48VDC BOARD

CPO-PE000064 MB

PART LIST

AZ000010 M0 SPE EXPERT 1K-FA LINEAR AMPLIFIER
CPO-PE000064 MB 48VDC BOARD

Date: Tuesday 13 March 2007
Rev.: B

Società Per l'Elettronica s.r.l.
Via Di Monteverde, 33
00152 Roma - Italy

Develops : SSP Divisi Cristiano
Verified : RSH Utimpergher Luciano

Item	Qty	Reference	Part	Type	%	W	VDC	COD SPE	PACKAGE	NOTE
1	1	CAP1	47000uF	ELE			80V	CC141017	C2550	
2	1	R1	27K4		1%	0.25W		CR221212	R400	
3	1	R2	2K74		1%	0.25W		CR221153	R400	
4	1	R3	30K1		1%	0.25W		CR221215	R400	
5	1	R4	1K		1%	0.25W		CR221013	R400	
6	1	R5	3K32		1%	0.25W		CR221159	R400	
7	1	R6	560		5%	13W		CR411055	R2050	
8	1	R7	0.005			20W		CR491019	R2025	
9	2	R9,R8	R_TAR		1%	0.1W			J\2P\0805	
10	4	S1,S2,S3,S4	PAD					ON P.B.	PAD	
11	2	S6,S5	PAD					ON P.B.	PAD	
12	6	S7,S8,S9,S10,S11,S12	SONICSERT M3					MC000064	SONICSERT M3	
13	1	S13	AMP4					FP000011	AMP4	
14	1	S14	AMP2					FP000006	AMP2	
15	1		PRINTED BOARD					PX000064 M1		
16	1		LABEL					ZE000019		

SOCIETÁ PER L'ELETTRONICA s.r.l.

SCR BOARD

CPO-PE000067 MB

PART LIST

AZ000010 M0 SPE EXPERT 1K-FA LINEAR AMPLIFIER
CPO-PE000067 MB SCR BOARD

Date: Tuesday 13 March 2007
Rev.: B

Società Per l'Elettronica s.r.l.
Via Di Monteverde, 33
00152 Roma - Italy

Develops : SSP Divisi Cristiano
Verified : RSH Utimpergher Luciano

Item	Qty	Reference	Part	Type	%	W	VDC	COD SPE	PACKAGE	NOTE
1	6	C1,C2,C3,C4,C5,C6	10nF	CER	20%		250V	CC451008	C200	
2	2	D1,D2	BYV95C					CH221003	DO41	
3	2	P1,P2,	PAD					ON P.B.	PAD	
3	2	P3,P4	PAD					ON P.B.	PAD	
4	4	P5,P6,P7,P8	PAD					ON P.B.	PAD	
5	2	Q2,Q1	70TPS12					CH972002	TO247AC	
6	2	Q4,Q3	40TPS08					CH972001	TO247AC	
7	2	R1,R2	270		5%	0.25W		CR211019	R400	
8	1	S1	PADS					ON P.B.	PADS	
9	2	S2,S3	PAD					ON P.B.	PAD	
10	1		PRINTED BOARD					PX000067 M1		
11	1		LABEL					ZE000019		

SOCIETÁ PER L'ELETTRONICA s.r.l.

CHANGE VOLTAGE BOARD

CPO-PE000068 MB

PART LIST

AZ000010 M0 SPE EXPERT 1K-FA LINEAR AMPLIFIER
CPO-PE000068 MB CHANGE VOLTAGE BOARD

Date: Tuesday 13 March 2007
Rev.: B

Società Per l'Elettronica s.r.l.
Via Di Monteverde, 33
00152 Roma - Italy

Develops : SSP Divisi Cristiano
Verified : RSH Utimpergher Luciano

Item	Qty	Reference	Part	Type	%	W	VDC	COD SPE	PACKAGE	NOTE
1	2	FF1,FF2	HOLE3.3/PAD					ON P.B.	HOLE3.3/PAD	
2	10	P1,P2,P3,P4,P5,P6,P7,P8, P9,P10	SONICSERT M3					MC000064	SONICSERT M3	
3	1		PRINTED BOARD					PX000068 M1		
4	1		LABEL					ZE000019		

SPE s.r.l.
Via di Monteverde, 33 00152 Rome (Italy)
Tel. +390658209429
Fax. +390658209647
E-mail: info@linear-amplifier.com
Website: http://www.linear-amplifier.com